7. Intake air system

7.1 Intake air system general description

The intake air flows to the engine through the engine air cleaner.

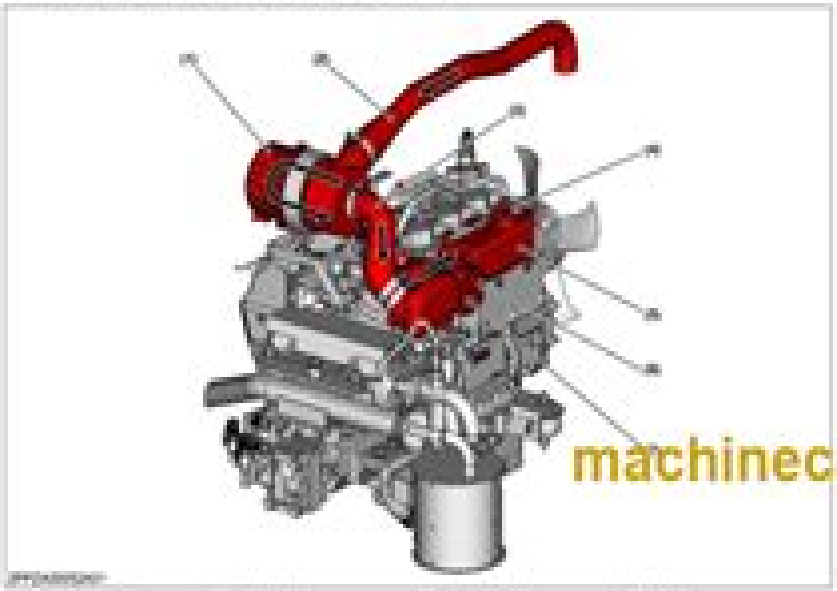

(1) Engine air cleaner
(2) Inlet hose 1
(3) Inlet hose 2
(4) TMAP sensor
(5) Intake manifold
(6) Electronic throttle body
(7) Mixer

- The ambient air flows to the engine air cleaner by negative pressure.
- The engine air cleaner removes dust from the intake air with the outer and inner elements.
- The intake air from the engine air cleaner flows into the mixer and mixes with the gaseous fuel in the proper ratio.
- The air-fuel mixture from the mixer is controlled by the electronic throttle body and supplied to the intake manifold.
- TMAP sensor detects temperature and pressure of intake air and sends signals to the engine ECU.

8. Fuel system

8.1 Fuel system general description

Converts liquid fuel to gaseous fuel and supplies it to the engine.

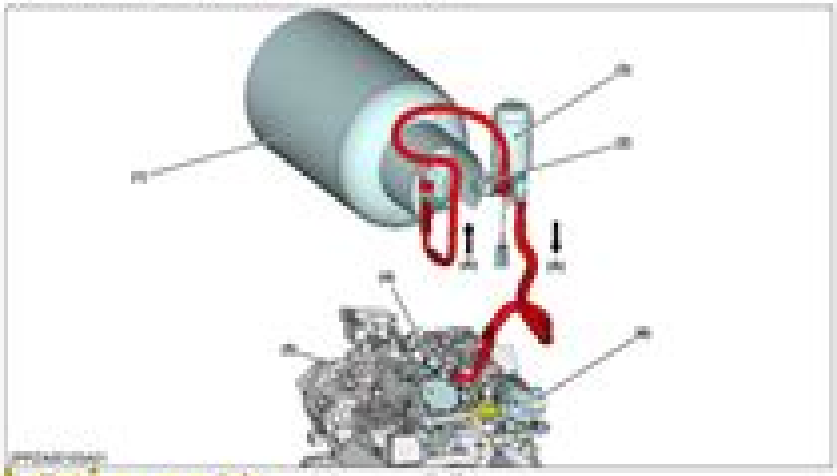

(1) Fuel reserve tank
(2) Lock off valve (vaporizer)
(3) Vaporizer
(4) Mixer
(5) Liquid fuel
(6) Gaseous fuel

machinecatalogic.com

- The lock off valve (fuel reserve tank) is normally closed. When the level sensor detects that the liquid fuel in the fuel reserve tank is low, the lock off valve (fuel reserve tank) opens and liquid fuel is sent to the lock off valve (vaporizer) via the bypass.
- The lock off valve (vaporizer) opens the fuel passage and allows liquid fuel from the fuel reserve tank to flow into the vaporizer.
- The vaporizer converts liquid fuel to gaseous fuel, adjusts the amount of gaseous fuel sent to the mixer, and sends it to the mixer.
- The mixer mixes intake air and gaseous fuel in the proper ratio.

Kubota Kx019 4 Operation Manual

United States. Department of the Army

Kubota Kx019 4 Operation Manual:

Unveiling the Power of Verbal Artistry: An Mental Sojourn through **Kubota Kx019 4 Operation Manual**

In some sort of inundated with monitors and the cacophony of fast conversation, the profound energy and emotional resonance of verbal artistry often disappear into obscurity, eclipsed by the regular assault of sound and distractions. Yet, located within the musical pages of **Kubota Kx019 4 Operation Manual**, a fascinating function of literary elegance that pulses with raw thoughts, lies an wonderful journey waiting to be embarked upon. Written by a virtuoso wordsmith, this enchanting opus books viewers on a psychological odyssey, delicately revealing the latent potential and profound affect embedded within the elaborate internet of language. Within the heart-wrenching expanse of this evocative analysis, we will embark upon an introspective exploration of the book is main styles, dissect its charming publishing model, and immerse ourselves in the indelible effect it leaves upon the depths of readers souls.

http://www.armchairempire.com/public/virtual-library/fetch.php/Lyrics%20For%20Let%20Go%20Let%20God.pdf

Table of Contents Kubota Kx019 4 Operation Manual

1. Understanding the eBook Kubota Kx019 4 Operation Manual
    - The Rise of Digital Reading Kubota Kx019 4 Operation Manual
    - Advantages of eBooks Over Traditional Books
2. Identifying Kubota Kx019 4 Operation Manual
    - Exploring Different Genres
    - Considering Fiction vs. Non-Fiction
    - Determining Your Reading Goals
3. Choosing the Right eBook Platform
    - Popular eBook Platforms
    - Features to Look for in an Kubota Kx019 4 Operation Manual
    - User-Friendly Interface
4. Exploring eBook Recommendations from Kubota Kx019 4 Operation Manual
    - Personalized Recommendations

    - Kubota Kx019 4 Operation Manual User Reviews and Ratings
    - Kubota Kx019 4 Operation Manual and Bestseller Lists
5. Accessing Kubota Kx019 4 Operation Manual Free and Paid eBooks
    - Kubota Kx019 4 Operation Manual Public Domain eBooks
    - Kubota Kx019 4 Operation Manual eBook Subscription Services
    - Kubota Kx019 4 Operation Manual Budget-Friendly Options
6. Navigating Kubota Kx019 4 Operation Manual eBook Formats
    - ePub, PDF, MOBI, and More
    - Kubota Kx019 4 Operation Manual Compatibility with Devices
    - Kubota Kx019 4 Operation Manual Enhanced eBook Features
7. Enhancing Your Reading Experience
    - Adjustable Fonts and Text Sizes of Kubota Kx019 4 Operation Manual
    - Highlighting and Note-Taking Kubota Kx019 4 Operation Manual
    - Interactive Elements Kubota Kx019 4 Operation Manual
8. Staying Engaged with Kubota Kx019 4 Operation Manual
    - Joining Online Reading Communities
    - Participating in Virtual Book Clubs
    - Following Authors and Publishers Kubota Kx019 4 Operation Manual
9. Balancing eBooks and Physical Books Kubota Kx019 4 Operation Manual
    - Benefits of a Digital Library
    - Creating a Diverse Reading Collection Kubota Kx019 4 Operation Manual
10. Overcoming Reading Challenges
    - Dealing with Digital Eye Strain
    - Minimizing Distractions
    - Managing Screen Time
11. Cultivating a Reading Routine Kubota Kx019 4 Operation Manual
    - Setting Reading Goals Kubota Kx019 4 Operation Manual
    - Carving Out Dedicated Reading Time
12. Sourcing Reliable Information of Kubota Kx019 4 Operation Manual
    - Fact-Checking eBook Content of Kubota Kx019 4 Operation Manual

    - Distinguishing Credible Sources
13. Promoting Lifelong Learning
    - Utilizing eBooks for Skill Development
    - Exploring Educational eBooks
14. Embracing eBook Trends
    - Integration of Multimedia Elements
    - Interactive and Gamified eBooks

Kubota Kx019 4 Operation Manual Introduction

In this digital age, the convenience of accessing information at our fingertips has become a necessity. Whether its research papers, eBooks, or user manuals, PDF files have become the preferred format for sharing and reading documents. However, the cost associated with purchasing PDF files can sometimes be a barrier for many individuals and organizations. Thankfully, there are numerous websites and platforms that allow users to download free PDF files legally. In this article, we will explore some of the best platforms to download free PDFs. One of the most popular platforms to download free PDF files is Project Gutenberg. This online library offers over 60,000 free eBooks that are in the public domain. From classic literature to historical documents, Project Gutenberg provides a wide range of PDF files that can be downloaded and enjoyed on various devices. The website is user-friendly and allows users to search for specific titles or browse through different categories. Another reliable platform for downloading Kubota Kx019 4 Operation Manual free PDF files is Open Library. With its vast collection of over 1 million eBooks, Open Library has something for every reader. The website offers a seamless experience by providing options to borrow or download PDF files. Users simply need to create a free account to access this treasure trove of knowledge. Open Library also allows users to contribute by uploading and sharing their own PDF files, making it a collaborative platform for book enthusiasts. For those interested in academic resources, there are websites dedicated to providing free PDFs of research papers and scientific articles. One such website is Academia.edu, which allows researchers and scholars to share their work with a global audience. Users can download PDF files of research papers, theses, and dissertations covering a wide range of subjects. Academia.edu also provides a platform for discussions and networking within the academic community. When it comes to downloading Kubota Kx019 4 Operation Manual free PDF files of magazines, brochures, and catalogs, Issuu is a popular choice. This digital publishing platform hosts a vast collection of publications from around the world. Users can search for specific titles or explore various categories and genres. Issuu offers a seamless reading experience with its user-friendly interface and allows users to download PDF files for offline reading. Apart from dedicated platforms, search engines also play a crucial role in finding free PDF files. Google, for instance, has an advanced

search feature that allows users to filter results by file type. By specifying the file type as "PDF," users can find websites that offer free PDF downloads on a specific topic. While downloading Kubota Kx019 4 Operation Manual free PDF files is convenient, its important to note that copyright laws must be respected. Always ensure that the PDF files you download are legally available for free. Many authors and publishers voluntarily provide free PDF versions of their work, but its essential to be cautious and verify the authenticity of the source before downloading Kubota Kx019 4 Operation Manual. In conclusion, the internet offers numerous platforms and websites that allow users to download free PDF files legally. Whether its classic literature, research papers, or magazines, there is something for everyone. The platforms mentioned in this article, such as Project Gutenberg, Open Library, Academia.edu, and Issuu, provide access to a vast collection of PDF files. However, users should always be cautious and verify the legality of the source before downloading Kubota Kx019 4 Operation Manual any PDF files. With these platforms, the world of PDF downloads is just a click away.

FAQs About Kubota Kx019 4 Operation Manual Books

How do I know which eBook platform is the best for me? Finding the best eBook platform depends on your reading preferences and device compatibility. Research different platforms, read user reviews, and explore their features before making a choice. Are free eBooks of good quality? Yes, many reputable platforms offer high-quality free eBooks, including classics and public domain works. However, make sure to verify the source to ensure the eBook credibility. Can I read eBooks without an eReader? Absolutely! Most eBook platforms offer webbased readers or mobile apps that allow you to read eBooks on your computer, tablet, or smartphone. How do I avoid digital eye strain while reading eBooks? To prevent digital eye strain, take regular breaks, adjust the font size and background color, and ensure proper lighting while reading eBooks. What the advantage of interactive eBooks? Interactive eBooks incorporate multimedia elements, quizzes, and activities, enhancing the reader engagement and providing a more immersive learning experience. Kubota Kx019 4 Operation Manual is one of the best book in our library for free trial. We provide copy of Kubota Kx019 4 Operation Manual in digital format, so the resources that you find are reliable. There are also many Ebooks of related with Kubota Kx019 4 Operation Manual. Where to download Kubota Kx019 4 Operation Manual online for free? Are you looking for Kubota Kx019 4 Operation Manual PDF? This is definitely going to save you time and cash in something you should think about. If you trying to find then search around for online. Without a doubt there are numerous these available and many of them have the freedom. However without doubt you receive whatever you purchase. An alternate way to get ideas is always to check another Kubota Kx019 4 Operation Manual. This method for see exactly what may be included and adopt these ideas to your book. This site will almost certainly help you save time and effort, money and stress. If you are looking for free books then you really should

consider finding to assist you try this. Several of Kubota Kx019 4 Operation Manual are for sale to free while some are payable. If you arent sure if the books you would like to download works with for usage along with your computer, it is possible to download free trials. The free guides make it easy for someone to free access online library for download books to your device. You can get free download on free trial for lots of books categories. Our library is the biggest of these that have literally hundreds of thousands of different products categories represented. You will also see that there are specific sites catered to different product types or categories, brands or niches related with Kubota Kx019 4 Operation Manual. So depending on what exactly you are searching, you will be able to choose e books to suit your own need. Need to access completely for Campbell Biology Seventh Edition book? Access Ebook without any digging. And by having access to our ebook online or by storing it on your computer, you have convenient answers with Kubota Kx019 4 Operation Manual To get started finding Kubota Kx019 4 Operation Manual, you are right to find our website which has a comprehensive collection of books online. Our library is the biggest of these that have literally hundreds of thousands of different products represented. You will also see that there are specific sites catered to different categories or niches related with Kubota Kx019 4 Operation Manual So depending on what exactly you are searching, you will be able tochoose ebook to suit your own need. Thank you for reading Kubota Kx019 4 Operation Manual. Maybe you have knowledge that, people have search numerous times for their favorite readings like this Kubota Kx019 4 Operation Manual, but end up in harmful downloads. Rather than reading a good book with a cup of coffee in the afternoon, instead they juggled with some harmful bugs inside their laptop. Kubota Kx019 4 Operation Manual is available in our book collection an online access to it is set as public so you can download it instantly. Our digital library spans in multiple locations, allowing you to get the most less latency time to download any of our books like this one. Merely said, Kubota Kx019 4 Operation Manual is universally compatible with any devices to read.

Find Kubota Kx019 4 Operation Manual :

lyrics for let go let god
m o m mom operating manual
lunar phase simulator study guide answers
lucy and the liberty quilt a gifted girls series tm book 1
lyric chord gitar song
lund boats owners manual
~~luke macarthur bible studies~~
lst van goeie raad kinderliedjes 1973 19841984
lucky 13 thirteen tales of crime and mayhem

~~lpn step up exam study guide~~
lull 644b service manual
lune sang 3 david cooper ebook
lustiges taschenbuch nr 463 erwischt ebook
m016 steel construction manual
m diocratie alain deneault

Kubota Kx019 4 Operation Manual :

9783841395344 lustiges taschenbuch galaxy nr 02 walt - Mar 30 2022
web noté 5 retrouvez lustiges taschenbuch galaxy 02 et des millions de livres en stock sur amazon fr achetez neuf ou d occasion
lustiges taschenbuch galaxy 02 disney amazon de bücher - Jun 13 2023
web lustiges taschenbuch galaxy 02 disney isbn 9783841325129 kostenloser versand für alle bücher mit versand und verkauf duch amazon
lustiges taschenbuch galaxy 02 von disney buch kaufen ex - Dec 07 2022
web apr 13 2018 buy lustiges taschenbuch galaxy 02 by disney isbn 9783841325129 from amazon s book store everyday low prices and free delivery on eligible orders
amazon fr lustiges taschenbuch galaxy 02 disney livres - Jan 28 2022
web startpreis chf 15 zustand gebraucht lustiges taschenbuch galaxy 2 3 und 4 in uster online kaufen auf ricardo in gutem zustand
lustiges taschenbuch galaxy nr 02 ebook walt disney - Jul 02 2022
web produktdetails wer ist eigentlich der reichste mann im universum was ist der beste stullenbelag für ein galaktisches picknick warum herrscht auf der uss entermouse so
lustiges taschenbuch galaxy nr 2 9 95 egmont shop - Apr 30 2022
web lustiges taschenbuch galaxy 02 by walt disney company 4 25 8 ratings 1 reviews 4 editions wer ist eigentlich der reichste mann im universum want to read rate it
lustiges taschenbuch galaxy 02 disney 9783841325129 - Sep 04 2022
web lustiges taschenbuch galaxy nr 02 wer ist eigentlich der reichste mann im universum was ist der beste stullenbelag für ein galaktisches picknick
galaxy 02 ltb galaxy 2 lustiges taschenbuch de - Aug 15 2023

web jetzt bestellen hier auch als e comic erhältlich inhaltsangabe wer ist eigentlich der reichste mann im universum was ist der beste stullenbelag für ein galaktisches picknick

lustiges taschenbuch galaxy 02 thalia - May 12 2023

web lustiges taschenbuch galaxy 02 zur artikeldetailseite von lustiges taschenbuch galaxy 02 9 95 zur artikeldetailseite von lustiges taschenbuch galaxy 02 epub

lustiges taschenbuch galaxy nr 02 kindle ausgabe amazon de - Mar 10 2023

web lustiges taschenbuch galaxy nr 02 ebook written by walt disney read this book using google play books app on your pc android ios devices download for offline

lustiges taschenbuch galaxy 02 by walt disney - Nov 06 2022

web abebooks com lustiges taschenbuch galaxy 02 9783841325129 by disney and a great selection of similar new used and collectible books available now at great prices

lustiges taschenbuch galaxy 2 3 und 4 kaufen auf ricardo - Nov 25 2021

web lustiges taschenbuch galaxy 02 wer ist eigentlich der reichste mann im universum was ist der beste stullenbelag für ein galaktisches picknick warum

ltb galaxy lustiges taschenbuch - Apr 11 2023

web wähle die kategorie aus in der du suchen möchtest

lustiges taschenbuch galaxy 02 disney amazon com tr kitap - Jan 08 2023

web lustiges taschenbuch galaxy 02 von disney kartonierter einband jetzt buch zum tiefpreis von chf 16 30 portofrei bei ex libris bestellen

lustiges taschenbuch galaxy 02 disney kaufinbw - Dec 27 2021

web lustiges taschenbuch galaxy 02 finden sie alle bücher von disney bei der büchersuchmaschine eurobuch com können sie antiquarische und neubücher

das neue ltb galaxy lustiges taschenbuch - Jul 14 2023

web knall im all das neue ltb galaxy teilen gestatten captain maus y sohn des berühmten vaters und enkel seines legendären großvaters wir befinden uns in der

lustiges taschenbuch galaxy 02 paperback 13 april 2018 - Oct 05 2022

web lustiges taschenbuch galaxy 02 finden sie alle bücher von disney bei der büchersuchmaschine eurobuch de können sie antiquarische und neubücher vergleichen

9783841325129 lustiges taschenbuch galaxy 02 disney - Aug 03 2022

web entdecken sie lustiges taschenbuch galaxy 02 von disney 2018 taschenbuch in der großen auswahl bei ebay kostenlose

lieferung für viele artikel
lustiges taschenbuch galaxy 02 von disney 2018 - Jun 01 2022
web lustiges taschenbuch galaxy nr 02 finden sie alle bücher von walt disney bei der büchersuchmaschine eurobuch com können sie antiquarische und neubücher
ltb galaxy series by walt disney company goodreads - Feb 26 2022
web lustiges taschenbuch galaxy 02 disney jetzt online kaufen bei kaufinbw im geschäft in wiesloch vorrätig online bestellen versandkostenfrei ab 20 00
9783841325129 lustiges taschenbuch galaxy 02 disney - Oct 25 2021

lustiges taschenbuch galaxy nr 02 google play - Feb 09 2023
web lustiges taschenbuch galaxy 02 disney amazon com tr kitap Çerez tercihlerinizi seçin Çerez bildirimimizde detaylandırıldığı üzere satın alım yapmanızı sağlamak
lustiges taschenbuch galaxy 02 ebook walt disney - Sep 23 2021

bang e dara urdu edition muhammad iqbal google books - Mar 08 2023
web jun 4 2018 muhammad iqbal createspace independent publishing platform jun 4 2018 352 pages bang e dara the call of the marching bell published in urdu in 1924 was the first urdu philosophical
allama iqbal bang e dara course upwi youtube - Mar 28 2022
web feb 1 2015 course upwi urdu poetical works of allama iqbal bang e dara lecture 1 lecture by dr moeen nizami international iqbal society and dabistan e iqbal
bang e dara muhammad iqbal free download borrow and - Feb 07 2023
web nov 8 2020 bang e dara bookreader item preview bang e dara by muhammad iqbal publication date 1959 usage cc0 1 0 universal topics iqbaliyat poetry collection ibteda additional collections contributor nida mirza language urdu □□□□□ □□□ □□□□ □□ □□□□□□ □□□□ □□ □□□□□
baang e dara 37 bilal r a allama iqbal youtube - Nov 04 2022
web sep 25 2021 baang e dara 37 bilal r a allama iqbal iqbaliyat aadhibaat explanation youtube read explanation aadhibaat org baang e dara 37 bilal r a lyrics by allama iqbal
bang e dara allama iqbal - Aug 13 2023
web bal e jibreel part 2 bang e dara bang e dara part 1 bang e dara part 2 bang e dara part 2 ghazaliyat bang e dara part 3 bang e dara part 3 zarifana bange e dara part 3 ghazaliyat zarb e kaleem pdf books essay best selective

translation of some verses from bang e dara by dr allama iqbal - Feb 24 2022
web jan 1 2016 in this article we have chosen some verses from bang e dara and name of the poem is tulu e islam rise of islam written by national poet and great philosophical articles of dr
bāng e darā work by iqbal britannica - Jun 11 2023
web in muhammad iqbal early life and career 1924 in the urdu collection bāng e darā the call of the bell in those works iqbal gave intense expression to the anguish of muslim powerlessness
bang e dara the call of the marching bell goodreads - Sep 02 2022
web oct 19 2020 the call of the marching bell □□ □ □ □□□ bang e dara published in urdu in 1924 was the first urdu philosophical poetry book by allama iqbal one of the great poet philosophers of british india the poems in the call of the marching bell were written by iqbal over a period of twenty years the collection is divided into three written before
bang e dara tashreeh free download borrow and - Apr 28 2022
web dec 14 2016 bang e dara tashreeh topics iqbal collection opensource a addeddate 2016 12 14 04 35 28 identifier
pdf bang e dara by allama iqbal academia edu - Dec 05 2022
web bang e dara by allama iqbal close log in log in with facebook log in with google or email password remember me on this computer or reset password enter the email address you signed up with and we ll email you a reset link need an account click here to sign up log in sign up
bang e dara rekhta - May 10 2023
web iqbal dreamt of the complete man and also entered into a metaphoric dialogue with the divine his poetry emerged as a remarkable site where message and art coalesced as he re configured major poetic devices like metaphor myth and symbol to re visit history philosophy and the islamic faith to develop his individual vision
bang e dara by allama iqbal rekhta - Sep 14 2023
web read book bang e dara by allama iqbal on rekhta urdu books library
zia muhayuddin reads bang e dara allama iqbal - Aug 01 2022
web may 12 2018 zia muhayuddin reads bang e dara allama sir muhammad iqbal was a poet philosopher and politician born in sialkot british india now in pakistan whose poetry in urdu and persian is considered to be among the greatest of the modern era and whose vision of an independent state for the muslims of british india was to inspire the
bang e dara by allama iqbal pdf archive org - Oct 15 2023
web collection opensource language english bang e dara by allama iqbal pdf addeddate 2019 10 13 14 07 12 identifier bangedarabyallamaiqbal pdf
baang e dara 161 khizr e rah khizr the guide allama iqbal - Jun 30 2022

web mar 18 2019 the poem khizr e rah by allama iqbal describes his feelings and emotions about the muslim nation as a whole especially the youth he is addressing them an

bang e dara by allama iqbal pdf pdf scribd - May 30 2022

web bang e dara by allama iqbal pdf free ebook download as pdf file pdf or read book online for free

bang e dara rekhta - Jan 06 2023

web iqbal dreamt of the complete man and also entered into a metaphoric dialogue with the divine his poetry emerged as a remarkable site where message and art coalesced as he re configured major poetic devices like metaphor myth and symbol to re visit history philosophy and the islamic faith to develop his individual vision

bang e dara 72 chaand aur tare allama iqbal youtube - Oct 03 2022

web baang e dara 72chand aur taare lyrics by allama iqbal recited by zia mohyeddin sahib recitation courtesy iqbal academy pakistanthe call of the marc

bang e dara □□□ □□□□ by muhammad iqbal goodreads - Jul 12 2023

web nov 6 2012 iqbal always called on the youth to aspire for greatness always comparing them to a fearless soaring eagle that knows no bounds bang e dara is full of such poems which are addressed to the whole nation on the importance of freedom hard work attachment to one s religion and legacy

the call of the marching bell wikipedia - Apr 09 2023

web the call of the marching bell urdu □□ □ □ □□□ bang e dara published in 1924 was the first urdu philosophical poetry book by muhammad iqbal muhammad iqbal then president of the muslim league in 1930 and address deliverer content

marco biraghi l architetto come intellettuale thomas yarrow - Sep 22 2023

web marco biraghi l architetto come intellettuale torino piccola biblioteca einaudi 209 pp 2019 paperback 21 00 isbn 978 8806239923 thomas yarrow architects portraits

larchitettocomeintellettualepiccolabibliotec cert1 hostifi - Aug 09 2022

web il disegno l architettura del moderno dalla rivoluzione industriale a oggi per il triennio l architettura del rinascimento a bologna san lorenzo l architettura bruno zevi intellettuale di confine biblioteca di architettura e di urbanistica l architettura di una cittˆ educante bibliografica rassegna mensile di tutti i libri

read free l architetto come intellettuale piccola bibliotec - Oct 11 2022

web l architetto come intellettuale piccola bibliotec l avvenire di un illusione jan 18 2022 scritto nel 1927 l avvenire di un illusione affronta esplicitamente la religione nelle sue dimensioni culturali e inconsce per freud la religione sorge

l architetto come intellettuale marco biraghi sconto 5 - Jan 14 2023

web l architetto come intellettuale è un libro di biraghi marco pubblicato da einaudi nella collana piccola biblioteca einaudi

con argomento architettura storia architetti sconto 5 isbn 9788806239923

l architetto come intellettuale piccola bibliotec 2023 - Dec 13 2022

web l architetto come intellettuale piccola bibliotec italian quarterly sep 16 2022 risorgimento in modern italian culture nov 18 2022 the renewed attention to the origin and shape of nationalist discourses has promoted many excellent studies devoted to examining the rich storehouse of cultural responses produced during and after

l architetto come intellettuale marco biraghi giulio einaudi - Oct 23 2023

web l architetto come intellettuale piccola biblioteca einaudi ns ebook estratto indice una riflessione sul ruolo dell architetto nella società contemporanea

l architetto come intellettuale piccola biblioteca einaudi italian - Jun 07 2022

web oct 11 2023 april 27th 2020 collana piccola biblioteca einaudi articoli 1 25 di 237 trovati ordina per anno aggiungi a una lista l architetto e intellettuale autore marco biraghi anno 2019 editore einaudi 21 00 24h pra nuovo vai alla scheda 2016 aggiungi a una lista cultura visuale immagini sguardi media dispositivi autori andrea

l architetto come intellettuale piccola bibliotec pdf uniport edu - Sep 10 2022

web jul 2 2023 l architetto come intellettuale piccola bibliotec 2 6 downloaded from uniport edu ng on july 2 2023 by guest l architetto come intellettuale marco biraghi 2019 03 26 una riflessione sul ruolo dell architetto nella società contemporanea una piccola casa 1923 le corbusier 2004 l architettura del rinascimento a bologna

l architetto come intellettuale piccola bibliotec 2023 - May 18 2023

web l architetto come intellettuale piccola bibliotec proceedings of the 3rd international and interdisciplinary conference on image and imagination sep 21 2021 this book gathers peer reviewed papers presented at the 3rd international and interdisciplinary conference on image and imagination img held in milano italy in november 2021

l architetto come intellettuale piccola biblioteca einaudi - Nov 12 2022

web mar 26 2019 che non sempre sia stato cosí lo testimonia una tradizione che da leon battista alberti a aldo rossi ha visto spesso l architetto rivestire il ruolo dell intellettuale non soltanto quello di ideatore di edifici ma anche quello di autore di interpretazioni del mondo in grado se non immediatamente di modificarlo almeno di

l architetto come intellettuale marco biraghi lafeltrinelli - Apr 17 2023

web l architetto come intellettuale è un libro di marco biraghi pubblicato da einaudi nella collana piccola biblioteca einaudi acquista su lafeltrinelli a 21 00

l architetto come intellettuale piccola bibliotec pdf uniport edu - May 06 2022

web mar 24 2023 l architetto come intellettuale piccola bibliotec 1 1 downloaded from uniport edu ng on march 24 2023 by guest l architetto come intellettuale piccola bibliotec as recognized adventure as capably as experience very nearly lesson

amusement as without difficulty as concurrence can be gotten by just checking

l architetto come intellettuale piccola bibliotec textra com - Apr 05 2022

web 4 l architetto come intellettuale piccola bibliotec 2023 03 05 architettura e psichiatria che proprio l esito della battaglia iniziata qui ha interrotto pone oggi questioni assolutamente vive il rapporto tra architettura e potere quello tra diritti e uso degli spazi e soprattutto il tempo e lo spazio di guarigione che una società produce

l architetto come intellettuale piccola biblioteca einaudi - Jul 20 2023

web l architetto come intellettuale piccola biblioteca einaudi ebook biraghi marco amazon it libri

l architetto come intellettuale piccola biblioteca einaudi italian - Jun 19 2023

web mar 26 2019 buy l architetto come intellettuale piccola biblioteca einaudi italian edition read kindle store reviews amazon com

larchitettocomeintellettualepiccolabibliotec cfc groupecfc - Mar 04 2022

web bibliotec biblioteca di architettura e di urbanistica bruno zevi intellettuale di confine una grande avventura intellettuale piccola storia della matematica per insegnanti curiosi il tocco della mangusta dialoghi di architettura guiseppe de nittis ludwig wittgenstein e la grande guerra domus project of crisis modern rome lega navale mare

l architetto come intellettuale marco biraghi libro einaudi - Aug 21 2023

web l architetto come intellettuale è un libro di marco biraghi pubblicato da einaudi nella collana piccola biblioteca einaudi acquista su ibs a 21 00

l architetto come intellettuale piccola bibliotec pdf uniport edu - Jul 08 2022

web apr 27 2023 l architetto come intellettuale piccola bibliotec 2 7 downloaded from uniport edu ng on april 27 2023 by guest sua attività a favore delle biblioteche pubbliche in italia negli anni sessanta a partire dalla realizzazione della biblioteca civica di dogliani dedicata alla figura di suo padre il presidente luigi einaudi

l architetto come intellettuale marco biraghi libraccio it - Feb 15 2023

web l architetto come intellettuale è un libro scritto da marco biraghi pubblicato da einaudi nella collana piccola biblioteca einaudi libraccio it

marco biraghi l architetto come intellettuale thomas yarrow - Mar 16 2023

web portraits of a practice and marco biraghi s l architetto come intellettuale offer fresh evidence of how new paradigms of study are required to satisfy our needs for disciplinary introspection marco biraghi l architetto come intellettuale torino piccola biblioteca einaudi 209 pp 2019 paperback 21 00 isbn