E040B GEAR CASE GROUP avancer-forward reculer-back

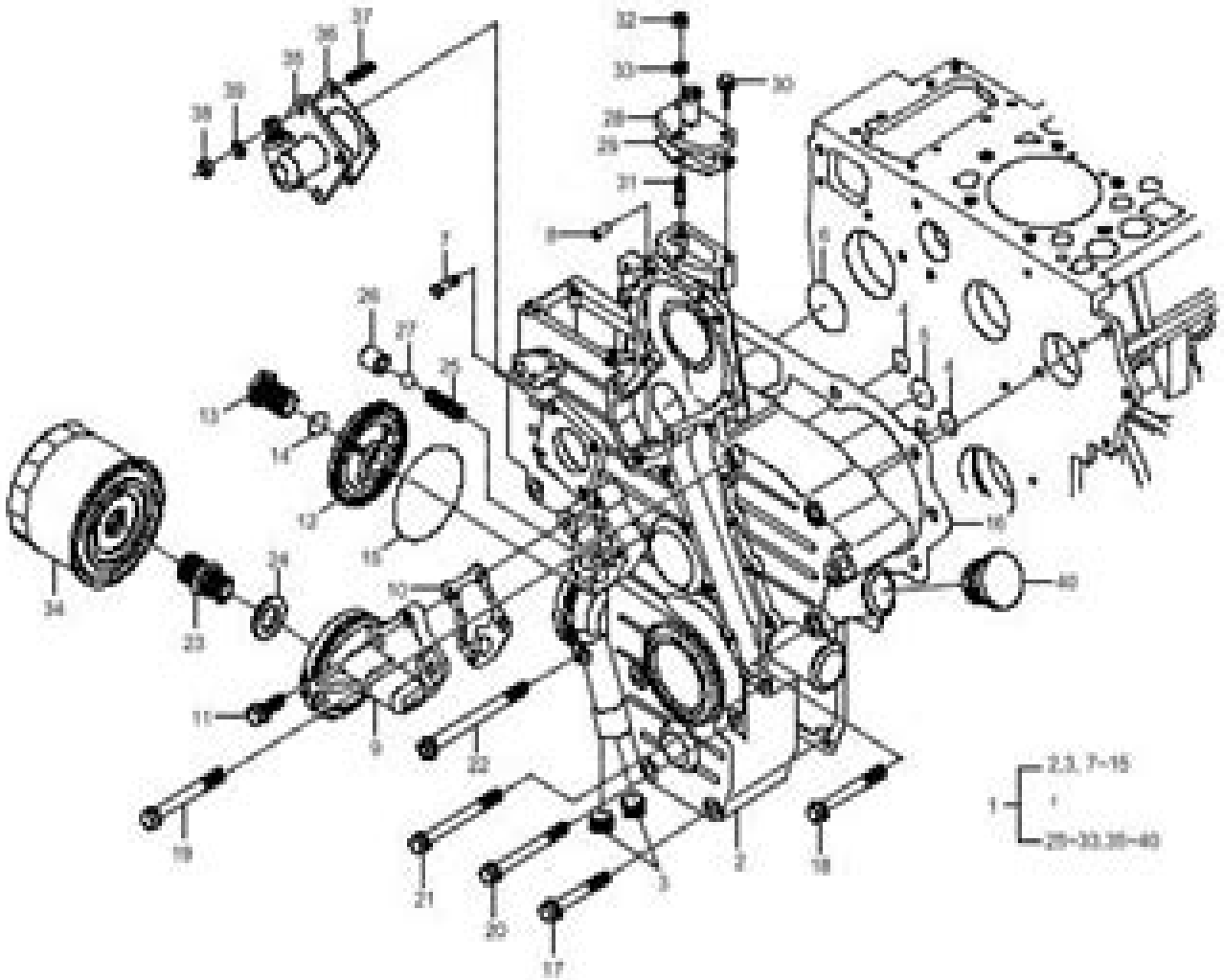

Kioti Tractor Manuals For 40

Wolfgang Guggemos

Kioti Tractor Manuals For 40:

As recognized, adventure as skillfully as experience not quite lesson, amusement, as without difficulty as contract can be gotten by just checking out a book **Kioti Tractor Manuals For 40** furthermore it is not directly done, you could say yes even more around this life, roughly the world.

We have the funds for you this proper as without difficulty as simple pretentiousness to acquire those all. We offer Kioti Tractor Manuals For 40 and numerous books collections from fictions to scientific research in any way. in the middle of them is this Kioti Tractor Manuals For 40 that can be your partner.

http://www.armchairempire.com/About/browse/index.jsp/How_To_Prepare_For_The_Ap_Psychology_Barrons_Ap_Psychology_Exam.pdf

Table of Contents Kioti Tractor Manuals For 40

1. Understanding the eBook Kioti Tractor Manuals For 40
    - The Rise of Digital Reading Kioti Tractor Manuals For 40
    - Advantages of eBooks Over Traditional Books
2. Identifying Kioti Tractor Manuals For 40
    - Exploring Different Genres
    - Considering Fiction vs. Non-Fiction
    - Determining Your Reading Goals
3. Choosing the Right eBook Platform
    - Popular eBook Platforms
    - Features to Look for in an Kioti Tractor Manuals For 40
    - User-Friendly Interface
4. Exploring eBook Recommendations from Kioti Tractor Manuals For 40
    - Personalized Recommendations
    - Kioti Tractor Manuals For 40 User Reviews and Ratings
    - Kioti Tractor Manuals For 40 and Bestseller Lists

5. Accessing Kioti Tractor Manuals For 40 Free and Paid eBooks
    - Kioti Tractor Manuals For 40 Public Domain eBooks
    - Kioti Tractor Manuals For 40 eBook Subscription Services
    - Kioti Tractor Manuals For 40 Budget-Friendly Options
6. Navigating Kioti Tractor Manuals For 40 eBook Formats
    - ePub, PDF, MOBI, and More
    - Kioti Tractor Manuals For 40 Compatibility with Devices
    - Kioti Tractor Manuals For 40 Enhanced eBook Features
7. Enhancing Your Reading Experience
    - Adjustable Fonts and Text Sizes of Kioti Tractor Manuals For 40
    - Highlighting and Note-Taking Kioti Tractor Manuals For 40
    - Interactive Elements Kioti Tractor Manuals For 40
8. Staying Engaged with Kioti Tractor Manuals For 40
    - Joining Online Reading Communities
    - Participating in Virtual Book Clubs
    - Following Authors and Publishers Kioti Tractor Manuals For 40
9. Balancing eBooks and Physical Books Kioti Tractor Manuals For 40
    - Benefits of a Digital Library
    - Creating a Diverse Reading Collection Kioti Tractor Manuals For 40
10. Overcoming Reading Challenges
    - Dealing with Digital Eye Strain
    - Minimizing Distractions
    - Managing Screen Time
11. Cultivating a Reading Routine Kioti Tractor Manuals For 40
    - Setting Reading Goals Kioti Tractor Manuals For 40
    - Carving Out Dedicated Reading Time
12. Sourcing Reliable Information of Kioti Tractor Manuals For 40
    - Fact-Checking eBook Content of Kioti Tractor Manuals For 40
    - Distinguishing Credible Sources
13. Promoting Lifelong Learning

    - Utilizing eBooks for Skill Development
    - Exploring Educational eBooks
14. Embracing eBook Trends
    - Integration of Multimedia Elements
    - Interactive and Gamified eBooks

Kioti Tractor Manuals For 40 Introduction

Free PDF Books and Manuals for Download: Unlocking Knowledge at Your Fingertips In todays fast-paced digital age, obtaining valuable knowledge has become easier than ever. Thanks to the internet, a vast array of books and manuals are now available for free download in PDF format. Whether you are a student, professional, or simply an avid reader, this treasure trove of downloadable resources offers a wealth of information, conveniently accessible anytime, anywhere. The advent of online libraries and platforms dedicated to sharing knowledge has revolutionized the way we consume information. No longer confined to physical libraries or bookstores, readers can now access an extensive collection of digital books and manuals with just a few clicks. These resources, available in PDF, Microsoft Word, and PowerPoint formats, cater to a wide range of interests, including literature, technology, science, history, and much more. One notable platform where you can explore and download free Kioti Tractor Manuals For 40 PDF books and manuals is the internets largest free library. Hosted online, this catalog compiles a vast assortment of documents, making it a veritable goldmine of knowledge. With its easy-to-use website interface and customizable PDF generator, this platform offers a user-friendly experience, allowing individuals to effortlessly navigate and access the information they seek. The availability of free PDF books and manuals on this platform demonstrates its commitment to democratizing education and empowering individuals with the tools needed to succeed in their chosen fields. It allows anyone, regardless of their background or financial limitations, to expand their horizons and gain insights from experts in various disciplines. One of the most significant advantages of downloading PDF books and manuals lies in their portability. Unlike physical copies, digital books can be stored and carried on a single device, such as a tablet or smartphone, saving valuable space and weight. This convenience makes it possible for readers to have their entire library at their fingertips, whether they are commuting, traveling, or simply enjoying a lazy afternoon at home. Additionally, digital files are easily searchable, enabling readers to locate specific information within seconds. With a few keystrokes, users can search for keywords, topics, or phrases, making research and finding relevant information a breeze. This efficiency saves time and effort, streamlining the learning process and allowing individuals to focus on extracting the information they need. Furthermore, the availability of free PDF books and manuals fosters a culture of continuous learning. By removing financial barriers, more people can access educational resources and pursue lifelong learning, contributing to personal

growth and professional development. This democratization of knowledge promotes intellectual curiosity and empowers individuals to become lifelong learners, promoting progress and innovation in various fields. It is worth noting that while accessing free Kioti Tractor Manuals For 40 PDF books and manuals is convenient and cost-effective, it is vital to respect copyright laws and intellectual property rights. Platforms offering free downloads often operate within legal boundaries, ensuring that the materials they provide are either in the public domain or authorized for distribution. By adhering to copyright laws, users can enjoy the benefits of free access to knowledge while supporting the authors and publishers who make these resources available. In conclusion, the availability of Kioti Tractor Manuals For 40 free PDF books and manuals for download has revolutionized the way we access and consume knowledge. With just a few clicks, individuals can explore a vast collection of resources across different disciplines, all free of charge. This accessibility empowers individuals to become lifelong learners, contributing to personal growth, professional development, and the advancement of society as a whole. So why not unlock a world of knowledge today? Start exploring the vast sea of free PDF books and manuals waiting to be discovered right at your fingertips.

FAQs About Kioti Tractor Manuals For 40 Books

1. Where can I buy Kioti Tractor Manuals For 40 books? Bookstores: Physical bookstores like Barnes & Noble, Waterstones, and independent local stores. Online Retailers: Amazon, Book Depository, and various online bookstores offer a wide range of books in physical and digital formats.
2. What are the different book formats available? Hardcover: Sturdy and durable, usually more expensive. Paperback: Cheaper, lighter, and more portable than hardcovers. E-books: Digital books available for e-readers like Kindle or software like Apple Books, Kindle, and Google Play Books.
3. How do I choose a Kioti Tractor Manuals For 40 book to read? Genres: Consider the genre you enjoy (fiction, non-fiction, mystery, sci-fi, etc.). Recommendations: Ask friends, join book clubs, or explore online reviews and recommendations. Author: If you like a particular author, you might enjoy more of their work.
4. How do I take care of Kioti Tractor Manuals For 40 books? Storage: Keep them away from direct sunlight and in a dry environment. Handling: Avoid folding pages, use bookmarks, and handle them with clean hands. Cleaning: Gently dust the covers and pages occasionally.
5. Can I borrow books without buying them? Public Libraries: Local libraries offer a wide range of books for borrowing. Book Swaps: Community book exchanges or online platforms where people exchange books.

6. How can I track my reading progress or manage my book collection? Book Tracking Apps: Goodreads, LibraryThing, and Book Catalogue are popular apps for tracking your reading progress and managing book collections. Spreadsheets: You can create your own spreadsheet to track books read, ratings, and other details.
7. What are Kioti Tractor Manuals For 40 audiobooks, and where can I find them? Audiobooks: Audio recordings of books, perfect for listening while commuting or multitasking. Platforms: Audible, LibriVox, and Google Play Books offer a wide selection of audiobooks.
8. How do I support authors or the book industry? Buy Books: Purchase books from authors or independent bookstores. Reviews: Leave reviews on platforms like Goodreads or Amazon. Promotion: Share your favorite books on social media or recommend them to friends.
9. Are there book clubs or reading communities I can join? Local Clubs: Check for local book clubs in libraries or community centers. Online Communities: Platforms like Goodreads have virtual book clubs and discussion groups.
10. Can I read Kioti Tractor Manuals For 40 books for free? Public Domain Books: Many classic books are available for free as theyre in the public domain. Free E-books: Some websites offer free e-books legally, like Project Gutenberg or Open Library.

Find Kioti Tractor Manuals For 40 :

how to prepare for the ap psychology barrons ap psychology exam
how to download free software
how to get books on ipad
how to drive a manual car smoothly youtube
how to do bob marley twist
how to lose 1 stone in a week
how to master ccna
how to bleed brakes on 2004 tracker
how to defeat tugog the guardian in shadow of mordor
how to outnegotiate anyone even a car dealer
how to make 1 million dollars in a day
how to modify volkswagen beetle suspension brakes & chassis for high performance speedpro
how to buy a used car without getting ripped off

how to build horsepower volume 2
how to make big money in small apartments

Kioti Tractor Manuals For 40 :

terapia integrata in dizionario di medicina treccani - Dec 11 2022
web terapia integrata forma di psicoterapia derivante dalla sintesi teorica e pratica di approcci clinici differenti dal cognitivismo alla psicoanalisi e agli approcci umanistici l integrazione teorica implica la combinazione dei risultati empiricamente consolidati delle diverse teorie esistenti riguardo la struttura della mente e lo sviluppo della psicopatologia
la psicoterapia d integrazione strutturale download only - Mar 14 2023
web la psicoterapia d integrazione strutturale la psicoterapia costruttivista caratteristiche distintive oct 01 2020 1250 197 psicologia per migranti dec 15 2021 una lettura e una proposta metodologica nella cornice del modello pluralistico integrato finalizzata a realizzare interventi trasversali efficaci in diverse
la psicoterapia d integrazione strutturale pdf 2023 - Jul 18 2023
web introduction la psicoterapia d integrazione strutturale pdf 2023 treating complex traumatic stress disorders in children and adolescents julian d ford 2013 07 12 with contributions from prominent experts this pragmatic book takes a close look at the nature of complex psychological trauma in children and adolescents and the clinical
la psicoterapia d integrazione strutturale libreria universitaria - Aug 07 2022
web acquista la psicoterapia d integrazione strutturale su libreria universitaria spedizione gratuita sopra i 25 euro su libreria universitaria
la psicoterapia d integrazione strutturale 1 - Aug 19 2023
web may 18 2012 epistemologia 18 maggio 2012 questo è il primo degli otto volumi in cui verrà presentata la psicoterapia strutturale integrata modello creato nel e per il trattamento dei pazienti borderline e psicotici non cronoci descrive i postulati irrinunciabili il cui rispetto permette di ritenere scientifico un modello di psicoterapia e gli
9810476 nlm catalog result - May 16 2023
web 1 author s ariano giovanni title s la psicoterapia d integrazione strutturale giovanni ariano country of publication italy publisher roma armando editore c1997 description v ill language italian isbn 9788871447889 8871447883 9788883580390 v 2 8883580397 v 2 mesh psychotherapy methods contents 1 epistemologia 2
la psicoterapia d integrazione strutturale by giovanni ariano - Jul 06 2022
web teoria della dissociazione strutturale della collabora con noi psicologia fenomenologica il blog della la psicoterapia d integrazione strutturale 1 scupsis il trattamento dei disturbi gravi di personalità armando editore la psicoriabilitazione dello

psicotico è psicoterapia

la psicoterapia d integrazione strutturale pdf kelliemay - Apr 03 2022

web nov 19 2022 la psicoterapia d integrazione strutturale giovanni ariano 1997 quaderni di scienze sociale 1966 italiano a2 juan antonio silva caravaca 2011 10 11 los contenidos y metodología de este libro

la psicoterapia d integrazione strutturale by giovanni ariano - Sep 08 2022

web psicotico è psicoterapia la psicoterapia d integrazione strutturale 1 il trattamento a più fasi della dissociazione strutturale processi cognitivi e disregolazione emotiva un approccio la psicoterapia d integrazione strutturale giovanni formazione annuale di orientation sutd edu sg 1 13

la psicoterapia d integrazione strutturale pdf hipertexto - Mar 02 2022

web la psicoterapia d integrazione strutturale giovanni ariano 1997 frammenti di psiche aa vv 1753 01 01t00 00 00 00 49 1250 314 cambiare musica valerio salzano 2017 06 23 l autore del testo spinto dal bisogno di conciliare le sue due anime la musica e la psicologia affronta il difficile tema dell incontro tra le due

la psicoterapia d integrazione strutturale pdf uniport edu - May 04 2022

web la psicoterapia d integrazione strutturale giovanni ariano 1997 la civiltà cattolica 2006 storia teorie e tecniche della psicoterapia cognitiva antonio semerari 2015 06 01t00 00 00 02 00 un introduzione organica e completa alla psicoterapia cognitiva i più recenti modelli cognitivi della valutazione

la psicoterapia d integrazione strutturale giovanni ariano - Jun 17 2023

web la psicoterapia d integrazione strutturale è un libro di giovanni ariano pubblicato da armando editore nella collana psicologia psicologia clinica acquista su ibs a 15 50

psicoterapia integrata psicocitta it - Feb 13 2023

web la terapia integrata teoria gli studiosi sostengono che l uomo è un essere imperfetto e limitato e in quanto tale ciò che egli produce incluse le scienze presenta dei limiti questi limiti possono essere superati dalla terapia integrata un modello di terapia trasversale che usa di volta in volta teorie e strumenti diversi

la psicoterapia d integrazione strutturale giovanni ariano - Oct 09 2022

web la psicoterapia d integrazione strutturale è un libro di ariano giovanni pubblicato da armando editore nella collana psicologia psicologia clinica con argomento psicoterapia sconto 5 isbn 9788871447889

l approccio integrato in psicoterapia come funziona la seduta - Apr 15 2023

web aug 2 2023 secondo la società italiana di psicoterapia integrata s i p i l approccio integrato è un modello teorico e di intervento che racchiude in sé i concetti chiave di diversi altri modelli psicoterapici come la psicoanalisi la terapia cognitivo comportamentale e quella sistemico relazionale secondo diversi autori oltre all utilizzo

la psicoterapia d integrazione strutturale pdf ai classmonitor - Nov 10 2022
web la psicoterapia d integrazione strutturale tab edizioni edith stein si pone la domanda sulla finalità della formazione dell individuo su che cosa sia la comunità in funzione della quale è formato e come devono essere educate quelle persone che la costituiscono affinché questa si sviluppi l ipotesi della ricerca

la psicoterapia d integrazione strutturale by giovanni ariano - Feb 01 2022
web sep 10 2023 la psicoterapia d integrazione strutturale by giovanni ariano collabora con noi psicologia fenomenologica il blog della la psicoterapia d integrazione strutturale libro ariano ri umanizzare la psicoterapia analisi transazionale e il gioco in psicoterapia nuove applicazioni cliniche neuroscienze e integrazione mente corpo nelle relazioni d

l integrazione in psicoterapia associazione aspic - Jan 12 2023
web l integrazione in psicoterapia safran j d messer s b 2006 psychotherapy integration a postmodern critique clinical psychology science and practice volume 4 issue 2 40 152 una critica postmoderna l integrazionismo è ormai un orientamento molto rilevante nell ambito psicoterapeutico

la psicoterapia d integrazione strutturale pdf e - Jun 05 2022
web 2 la psicoterapia d integrazione strutturale 2020 06 20 intorno agli anni cinquanta del secolo scorso si vede una ripresa con la tendenza a staccare definitivamente la materia da quella che può essere definita l ipnosi da spettacolo ed è

sipi il modello strutturale integrato sipi - Sep 20 2023
web definizioni definire le tre parole che formano il logo del modello a modello b strutturale c integrato ci aiuta a cogliere i rapporti della psicoterapia d integrazione strutturale con le correnti dominanti dell universo psicoterapico a modello

consultant d entreprises statut juridique pratiques - Jul 11 2023
web apr 19 2021 l eurl comme statut juridique pour devenir consultant indépendant pour exercer en tant que consultant indépendant il peut être intéressant d opter pour le

consultant d entreprises statut juridique pratiqu - Dec 04 2022
web sep 20 2018 here are 5 trusted lawyers you can contact directly for a quote koh c u pinn 24 years 1 review samuel yuen 22 years 26 reviews kenneth pereire 12 years

consultant d entreprises statut juridique pratiques - Dec 24 2021
web marchand de biens statut juridique pratiques consultant service insertion robert chiffre d affaires choix du statut juridique de l entreprise en cration

consultant d entreprises statut juridique pratiqu pdf - Mar 27 2022
web fr achetez neuf ou d occasion consultant d entreprise statut juridique pratiques professionnelles 2013 2014 prêt à feuilleter à ses clients et aux services achat des

starting a consulting business in singapore beginner s - Mar 07 2023
web guide juridique du métier de consultant le choix du mode d exercice de la profession les re consultant d entreprises statut juridique pratiques professionnelles by
devenir consultant en 2023 legalstart fr - Apr 08 2023
web the licenses and permits you will need when starting a consulting business in singapore depend on what field you want to specialize in for example if you want to venture into
consultant d entreprises statut juridique pratiques - Sep 13 2023
web entrepreneur consultant d entreprise statut juridique pratiques ment devenir consultant indpendant agence juridique consultant d entreprise statut juridique et
comment devenir consultant freelance agence juridique - Jul 31 2022
web jun 28 2022 encore un doute sur le statut juridique à adopter pour votre entreprise bpifrance vous guide grâce à son outil d aide au choix du statut juridique répondez à
consultant d entreprises statut juridique et pratiques cultura - Oct 02 2022
web s il s agit d un consultant juridique intervenant dans d autres secteurs il doit posséder la spécialité adéquate par exemple droit des affaires ou droit social des écoles
free consultant d entreprises statut juridique pratiqu - May 29 2022
web mar 29 2023 des tensions constructives et les différents statuts mobiliser et fidéliser les personnels se préparer au rôle d entrepreneur social et solidaire se faire aider et
consultant indépendant pour quel statut juridique opter shine - Jan 05 2023
web entreprise de a à z dossier complet de création d entreprise conseils et articles d experts modèles de statuts sarl sci idées d entreprises qcm à 100 points
consultant indépendant quel statut juridique choisir - Jun 10 2023
web consultant d entreprises statut juridique pratiqu le guide juridique du créateur d entreprise oct 27 2022 en envisageant les règles juridiques applicables à
consultant juridique formation et compétences ooreka - Sep 01 2022
web jul 17 2019 les principaux statuts juridiques adaptés au consultant freelance la micro entreprise l entreprise individuelle l eirl la sasu comment démarrer son activité
consultant d entreprises statut juridique pratiques - Feb 23 2022
web professionnelle marchand de biens statut juridique pratiques formation devenir consultant e entreprise individuelle le statut de l entrepreneur consultant d

corporate lawyers in singapore singaporelegaladvice com - Nov 03 2022
web consultant d entreprises statut juridique et pratiques professionnelles par thierry lupiac aux éditions delmas qu est ce qu un consultant d entreprise cette
consultant d entreprises statut juridique pratiqu pdf gcca - Apr 27 2022
web véritable guide juridique du consultant d entreprise cette seconde édition permettra à tous ces professionnels par delà l extrême diversité de leur activité de s assurer que les
consultant d entreprises statut juridique pratiques - Jan 25 2022
web guide ultime consultant d entreprise statut juridique pratiques consultant d entreprise statut juridique et pratiques devenir consultant indpendant mode d
consultant d entreprises statut juridique pratiques - Nov 22 2021

consultant d entreprises statut juridique pratiques - Oct 14 2023
web achat consultant d entreprise statut juridique pratiques professionnelles à prix bas sur rakuten si vous êtes fan de lecture depuis des années découvrez sans plus tarder toutes nos offres et nos bonnes affaires exceptionnelles pour l acquisition d un
consultant d entreprises statut juridique pratiques - Feb 06 2023
web feb 6 2023 vous vous lancez votre activité de consulting et souhaitez savoir quel est le meilleur statut juridique pour un e consultant e indépendant e vous êtes au bon
consultant ou cabinet de conseil quel statut juridique choisir - Aug 12 2023
web cration d entreprise statut statutentreprise consultant wikipdia consultant d entreprise statut juridique pratiques devenir consultant itg ment devenir
quel statut juridique choisir pour son entreprise economie gouv fr - Jun 29 2022
web consultant d entreprises statut juridique pratiqu practical statistics in health and medical work jun 10 2023 tendances et politiques des privatisations jun 17 2021 le
pdf consultant d entreprises statut juridique pratiqu - May 09 2023
web grâce à l accompagnement de nos experts en création d entreprise devenir consultant devient simple un simple questionnaire à remplir en ligne sûr nos juristes vous
scope of financial management and functions of finance - Jul 04 2023
web mar 28 2013 show abstract pdf on mar 28 2013 swathi peddyreddy published scope of financial management and functions of finance find read and cite all the research you need on researchgate

finance function definition scope and classification financial - Sep 06 2023
web read this article to learn about the finance function 1 definition of the finance function 2 scope of the finance function 3 classification definition of the finance function there are three ways of defining the finance function
traditional vs modern concept of the finance function a digital - Jan 30 2023
web feb 3 2022 the traditional finance function the finance function of past decades centered around paper based manual transactions and processing it arranged the procurement of new financing accounted for various forms of operating capital and contributed to the handling of legal matters
financial management unit i josephscollege ac in - May 02 2023
web meaning financial management means planning organizing directing and controlling the financial activities such as procurement and utilization of funds of the enterprise it means applying general management principles to financial resources enterprise definition of financial management
nature and scope of financial management with pdf - Apr 20 2022
web applying management principles to manage the financial resources finance is termed as the backbone of every business it involves planning organizing directing and controlling of financial operations to manage covers the fundamentals of strategic
finance function meaning definition nature and scope - Oct 07 2023
web sep 19 2023 among various functions of business financial functions are one of the most significant functions it is all the business activities this function of a business cannot be ignored substituted or the lack of finance may prove to be disastrous for a business enterprise and may lead to its closure
shivaji college university of delhi - Jul 24 2022
web shivaji college university of delhi
lesson 1 financial management meaning objective function and scope - Apr 01 2023
web financial management meaning objective function and scope structure 1 0 objectives 1 1 introduction 1 2 meaning and nature of financial management 1 3 relation of finance function with other disciplines 1 4 scope of financial management 1 5 function of finance 1 6 objectives of financial
titled nature and scope of financial management - Nov 27 2022
web nature of financial management is concerned with its functions its goals trade off with conflicting goals its indispensability its systems its relation with other subsystems in the firm its environment its relationship with other disciplines the procedural aspects and its equation with other divisions within the organisation
nature of finance function study material lecturing notes - Aug 05 2023

web jun 19 2018 nature of finance function the finance function is the process of acquiring and utilizing funds of a business finance functions are related to overall management of an organization finance function is concerned with the policy decisions such as like of business size of firm type of equipment used use of debt liquidity position

what is finance meaning definition factors nature types scope - Feb 28 2023

web aims of finance function nature of finance scope of finance in various areas of an organization characteristics of finance types of finance required by a business concern classification of finance reasons for the importance of finance significance of finance importance of business finance functions of finance finance

financial management introduction definitions scope - Jun 03 2023

web nature significance and scope of financial management financial management is an organic function of any business any organization needs finances to obtain physical resources carry out the production activities and other business operations pay compensation to the suppliers etc

meaning nature and significance of business finance toppr - Mar 20 2022

web what is the meaning nature and significance of business finance let s find out more in the following section table of content 1 suggested videos 2 introduction 3 the scope of business finance 3 1 1 financial planning and control 3 2 2 financial statement analysis 3 3 3 working capital budget 4 nature and significance of business finance

what is financial management its nature scope emeritus - Dec 29 2022

web mar 30 2022 in simple terms financial management is the business function that deals with investing the available financial resources in a way that greater business success and return on investment roi is achieved financial management professionals plan organize and control all transactions in a business

nature scope objectives and functions of financial management - May 22 2022

web ffinance is defined as the management of money and includes activities like investing borrowing lending budgeting saving and forecasting there are three main types of finance 1 personal 2 corporate and 3 public government f an overview of financial management in the modern world virtually every organization public

nature and scope of financial management wikifinancepedia - Oct 27 2022

web explore the art of nature and scope of financial management uncover the dynamic nature of financial management strategies in our guide

what is nature and scope of financial management - Jun 22 2022

web aug 6 2020 what is nature and scope of financial management let us first understand the nature of financial management and then study about its scope nature of financial managementthe nature of financial management includes the following estimates capital requirementsfinancial management helps in anticipation of funds by estimating working

financial management explained scope objectives importance - Sep 25 2022
web sep 5 2023 september 4 2023 in business financial management is the practice of handling a company s finances in a way that allows it to be successful and compliant with regulations that takes both a high level plan and boots on the ground execution

nature purpose and scope of financial management studocu - Feb 16 2022
web financial management is management principles and practices applied to finance the nature of financial management is its tasks its aims the trade off with competing objectives its indispensability its processes its relationship with other subsystems within the corporation its environment its relationship with other departments its

scope of finance function study material lecturing notes - Aug 25 2022
web jun 19 2018 the operational functions of finance include financial planning deciding the capital structure selection of source of finance selection of pattern of investment financial planning the first task of a financial manager is to estimate short term and long term financial requirements of his business