REPAIR MANUAL

HATZ DIESEL

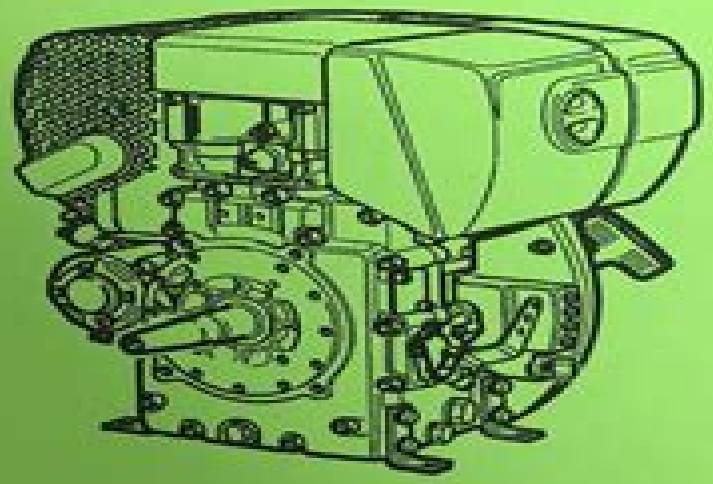

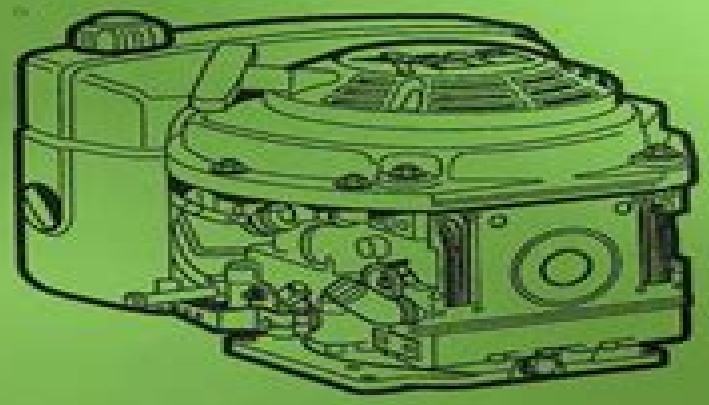

1 B . .

P/N# 85250012

Hatz Diesel 2 Cyl Repair Manual

RD Boyd

Hatz Diesel 2 Cyl Repair Manual:

Yeah, reviewing a books **Hatz Diesel 2 Cyl Repair Manual** could grow your near associates listings. This is just one of the solutions for you to be successful. As understood, achievement does not suggest that you have astonishing points.

Comprehending as skillfully as deal even more than supplementary will manage to pay for each success. next to, the declaration as capably as sharpness of this Hatz Diesel 2 Cyl Repair Manual can be taken as well as picked to act.

http://www.armchairempire.com/book/publication/default.aspx/manual_zelda.pdf

Table of Contents Hatz Diesel 2 Cyl Repair Manual

1. Understanding the eBook Hatz Diesel 2 Cyl Repair Manual
    - The Rise of Digital Reading Hatz Diesel 2 Cyl Repair Manual
    - Advantages of eBooks Over Traditional Books
2. Identifying Hatz Diesel 2 Cyl Repair Manual
    - Exploring Different Genres
    - Considering Fiction vs. Non-Fiction
    - Determining Your Reading Goals
3. Choosing the Right eBook Platform
    - Popular eBook Platforms
    - Features to Look for in an Hatz Diesel 2 Cyl Repair Manual
    - User-Friendly Interface
4. Exploring eBook Recommendations from Hatz Diesel 2 Cyl Repair Manual
    - Personalized Recommendations
    - Hatz Diesel 2 Cyl Repair Manual User Reviews and Ratings
    - Hatz Diesel 2 Cyl Repair Manual and Bestseller Lists
5. Accessing Hatz Diesel 2 Cyl Repair Manual Free and Paid eBooks
    - Hatz Diesel 2 Cyl Repair Manual Public Domain eBooks
    - Hatz Diesel 2 Cyl Repair Manual eBook Subscription Services

    - Hatz Diesel 2 Cyl Repair Manual Budget-Friendly Options
6. Navigating Hatz Diesel 2 Cyl Repair Manual eBook Formats
    - ePub, PDF, MOBI, and More
    - Hatz Diesel 2 Cyl Repair Manual Compatibility with Devices
    - Hatz Diesel 2 Cyl Repair Manual Enhanced eBook Features
7. Enhancing Your Reading Experience
    - Adjustable Fonts and Text Sizes of Hatz Diesel 2 Cyl Repair Manual
    - Highlighting and Note-Taking Hatz Diesel 2 Cyl Repair Manual
    - Interactive Elements Hatz Diesel 2 Cyl Repair Manual
8. Staying Engaged with Hatz Diesel 2 Cyl Repair Manual
    - Joining Online Reading Communities
    - Participating in Virtual Book Clubs
    - Following Authors and Publishers Hatz Diesel 2 Cyl Repair Manual
9. Balancing eBooks and Physical Books Hatz Diesel 2 Cyl Repair Manual
    - Benefits of a Digital Library
    - Creating a Diverse Reading Collection Hatz Diesel 2 Cyl Repair Manual
10. Overcoming Reading Challenges
    - Dealing with Digital Eye Strain
    - Minimizing Distractions
    - Managing Screen Time
11. Cultivating a Reading Routine Hatz Diesel 2 Cyl Repair Manual
    - Setting Reading Goals Hatz Diesel 2 Cyl Repair Manual
    - Carving Out Dedicated Reading Time
12. Sourcing Reliable Information of Hatz Diesel 2 Cyl Repair Manual
    - Fact-Checking eBook Content of Hatz Diesel 2 Cyl Repair Manual
    - Distinguishing Credible Sources
13. Promoting Lifelong Learning
    - Utilizing eBooks for Skill Development
    - Exploring Educational eBooks
14. Embracing eBook Trends

- Integration of Multimedia Elements
- Interactive and Gamified eBooks

Hatz Diesel 2 Cyl Repair Manual Introduction

In todays digital age, the availability of Hatz Diesel 2 Cyl Repair Manual books and manuals for download has revolutionized the way we access information. Gone are the days of physically flipping through pages and carrying heavy textbooks or manuals. With just a few clicks, we can now access a wealth of knowledge from the comfort of our own homes or on the go. This article will explore the advantages of Hatz Diesel 2 Cyl Repair Manual books and manuals for download, along with some popular platforms that offer these resources. One of the significant advantages of Hatz Diesel 2 Cyl Repair Manual books and manuals for download is the cost-saving aspect. Traditional books and manuals can be costly, especially if you need to purchase several of them for educational or professional purposes. By accessing Hatz Diesel 2 Cyl Repair Manual versions, you eliminate the need to spend money on physical copies. This not only saves you money but also reduces the environmental impact associated with book production and transportation. Furthermore, Hatz Diesel 2 Cyl Repair Manual books and manuals for download are incredibly convenient. With just a computer or smartphone and an internet connection, you can access a vast library of resources on any subject imaginable. Whether youre a student looking for textbooks, a professional seeking industry-specific manuals, or someone interested in self-improvement, these digital resources provide an efficient and accessible means of acquiring knowledge. Moreover, PDF books and manuals offer a range of benefits compared to other digital formats. PDF files are designed to retain their formatting regardless of the device used to open them. This ensures that the content appears exactly as intended by the author, with no loss of formatting or missing graphics. Additionally, PDF files can be easily annotated, bookmarked, and searched for specific terms, making them highly practical for studying or referencing. When it comes to accessing Hatz Diesel 2 Cyl Repair Manual books and manuals, several platforms offer an extensive collection of resources. One such platform is Project Gutenberg, a nonprofit organization that provides over 60,000 free eBooks. These books are primarily in the public domain, meaning they can be freely distributed and downloaded. Project Gutenberg offers a wide range of classic literature, making it an excellent resource for literature enthusiasts. Another popular platform for Hatz Diesel 2 Cyl Repair Manual books and manuals is Open Library. Open Library is an initiative of the Internet Archive, a non-profit organization dedicated to digitizing cultural artifacts and making them accessible to the public. Open Library hosts millions of books, including both public domain works and contemporary titles. It also allows users to borrow digital copies of certain books for a limited period, similar to a library lending system. Additionally, many universities and educational institutions have their own digital libraries that provide free access to PDF books and manuals. These libraries often offer academic texts, research papers, and technical manuals, making them

invaluable resources for students and researchers. Some notable examples include MIT OpenCourseWare, which offers free access to course materials from the Massachusetts Institute of Technology, and the Digital Public Library of America, which provides a vast collection of digitized books and historical documents. In conclusion, Hatz Diesel 2 Cyl Repair Manual books and manuals for download have transformed the way we access information. They provide a cost-effective and convenient means of acquiring knowledge, offering the ability to access a vast library of resources at our fingertips. With platforms like Project Gutenberg, Open Library, and various digital libraries offered by educational institutions, we have access to an ever-expanding collection of books and manuals. Whether for educational, professional, or personal purposes, these digital resources serve as valuable tools for continuous learning and self-improvement. So why not take advantage of the vast world of Hatz Diesel 2 Cyl Repair Manual books and manuals for download and embark on your journey of knowledge?

FAQs About Hatz Diesel 2 Cyl Repair Manual Books

How do I know which eBook platform is the best for me? Finding the best eBook platform depends on your reading preferences and device compatibility. Research different platforms, read user reviews, and explore their features before making a choice. Are free eBooks of good quality? Yes, many reputable platforms offer high-quality free eBooks, including classics and public domain works. However, make sure to verify the source to ensure the eBook credibility. Can I read eBooks without an eReader? Absolutely! Most eBook platforms offer webbased readers or mobile apps that allow you to read eBooks on your computer, tablet, or smartphone. How do I avoid digital eye strain while reading eBooks? To prevent digital eye strain, take regular breaks, adjust the font size and background color, and ensure proper lighting while reading eBooks. What the advantage of interactive eBooks? Interactive eBooks incorporate multimedia elements, quizzes, and activities, enhancing the reader engagement and providing a more immersive learning experience. Hatz Diesel 2 Cyl Repair Manual is one of the best book in our library for free trial. We provide copy of Hatz Diesel 2 Cyl Repair Manual in digital format, so the resources that you find are reliable. There are also many Ebooks of related with Hatz Diesel 2 Cyl Repair Manual. Where to download Hatz Diesel 2 Cyl Repair Manual online for free? Are you looking for Hatz Diesel 2 Cyl Repair Manual PDF? This is definitely going to save you time and cash in something you should think about. If you trying to find then search around for online. Without a doubt there are numerous these available and many of them have the freedom. However without doubt you receive whatever you purchase. An alternate way to get ideas is always to check another Hatz Diesel 2 Cyl Repair Manual. This method for see exactly what may be included and adopt these ideas to your book. This site will almost certainly help you save time and effort, money and stress. If you are looking for free books then you really should consider finding to assist you try this. Several of Hatz Diesel 2 Cyl Repair Manual are for sale to free while some are payable. If you arent sure if the books

you would like to download works with for usage along with your computer, it is possible to download free trials. The free guides make it easy for someone to free access online library for download books to your device. You can get free download on free trial for lots of books categories. Our library is the biggest of these that have literally hundreds of thousands of different products categories represented. You will also see that there are specific sites catered to different product types or categories, brands or niches related with Hatz Diesel 2 Cyl Repair Manual. So depending on what exactly you are searching, you will be able to choose e books to suit your own need. Need to access completely for Campbell Biology Seventh Edition book? Access Ebook without any digging. And by having access to our ebook online or by storing it on your computer, you have convenient answers with Hatz Diesel 2 Cyl Repair Manual To get started finding Hatz Diesel 2 Cyl Repair Manual, you are right to find our website which has a comprehensive collection of books online. Our library is the biggest of these that have literally hundreds of thousands of different products represented. You will also see that there are specific sites catered to different categories or niches related with Hatz Diesel 2 Cyl Repair Manual So depending on what exactly you are searching, you will be able tochoose ebook to suit your own need. Thank you for reading Hatz Diesel 2 Cyl Repair Manual. Maybe you have knowledge that, people have search numerous times for their favorite readings like this Hatz Diesel 2 Cyl Repair Manual, but end up in harmful downloads. Rather than reading a good book with a cup of coffee in the afternoon, instead they juggled with some harmful bugs inside their laptop. Hatz Diesel 2 Cyl Repair Manual is available in our book collection an online access to it is set as public so you can download it instantly. Our digital library spans in multiple locations, allowing you to get the most less latency time to download any of our books like this one. Merely said, Hatz Diesel 2 Cyl Repair Manual is universally compatible with any devices to read.

Find Hatz Diesel 2 Cyl Repair Manual :

manual zelda
manual toyota land cruiser 2005
manual transmission oil type
manual truck injector
~~manual w126 300se~~
manual yaris matic 2015
manual utilizare npkia e71
manuale officina opel corsa
manuali honda pcx
manual usuario opel zafira tourer

manuale d'officina gilera stalker
~~manuale di officina gilera arcore~~
manual tv samsung plasma 51 3d
manual testing interview questions and answers for 2 years experience
manual tv samsung pl43d490

Hatz Diesel 2 Cyl Repair Manual :

The Antisocial Personalities: 9780805819748: Lykken, David T. The Antisocial Personalities: 9780805819748: Lykken, David T. The antisocial personalities. by DT Lykken · 1995 · Cited by 2580 — The antisocial personalities. Lawrence Erlbaum Associates, Inc. Abstract. Since the 1950s, an extensive and impressively consistent experimental literature has ... The Antisocial Personalities - 1st Edition - David T. Lykken "Lykken's newest book on the antisocial personalities rivals and then surpasses the classic by Cleckley by combining hard-nosed science, as skillfully as Sagan, ... Antisocial personality disorder - Symptoms and causes Feb 24, 2023 — Antisocial personality disorder, sometimes called sociopathy, is a mental health condition in which a person consistently shows no regard for ... Antisocial Personality Disorder Apr 24, 2023 — Antisocial personality disorder is a mental health condition in which a person has a long-term pattern of manipulating, exploiting, or violating ... Antisocial personality disorder Antisocial personality disorder is a particularly challenging type of personality disorder characterised by impulsive, irresponsible and often criminal ... The Antisocial Personalities | David T. Lykken by DT Lykken · 2013 · Cited by 2583 — This volume also describes how American psychiatry's (DSM-IV) category of "Antisocial Personality Disorder" is heterogeneous and fails to ... Antisocial Personality Disorder (ASPD) Oct 6, 2023 — Antisocial personality disorder is a mental health condition that causes harmful behaviors without remorse. A person might show disrespect ... Antisocial personality disorder Not to be confused with Asociality or Anti-social behavior. "ASPD" redirects here. For the sleep disorder, see Advanced sleep phase disorder. For the former ... The Natural History of Antisocial Personality Disorder - PMC by DW Black · 2015 · Cited by 185 — Antisocial personality disorder (ASPD) is characterized by a pattern of socially irresponsible, exploitative, and guiltless behaviour. Self-Help Skills for People with Autism SELF-HELP SKILLS FOR PEOPLE WITH AUTISM thoroughly describes a systematic approach that parents and educators can use to teach basic self-care to children, ages ... A Review of Self-Help Skills for People with Autism by KD Lucker · 2009 · Cited by 12 — The book, Self-help skills for people with autism: A systematic teaching approach, by Anderson and colleagues, provides parents and professionals with a ... Self-Help Skills for People with Autism: A Systematic ... SELF-HELP SKILLS FOR PEOPLE WITH AUTISM thoroughly describes a systematic approach that parents and educators can use to teach basic self-care to children, ages ... Self-Help Skills for People with Autism: A Systematic ... Self-Help Skills for People with Autism: A

Systematic Teaching Approach (Topics in Autism) by Stephen R. Anderson (2007-08-22) [unknown author] on ... Self-help Skills for People with Autism: A Systematic ... Thoroughly describes a systematic, practical approach that parents (and educators) can use to teach basic self-care ? eating, dressing, toileting and ... Self-Help Skills for People with Autism: A Systematic ... Self-Help Skills for People with Autism: A Systematic Teaching Approach (Topics in Autism) by Stephen R. Anderson; Amy L. Jablonski; Vicki Madaus Knapp; ... Self-Help Skills for People with Autism: A Systematic ... SELF-HELP SKILLS FOR PEOPLE WITH AUTISM thoroughly describes a systematic approach that parents and educators can use to teach basic self-care to children, ages ... Self-help skills for people with autism : a systematic teaching ... Self-help skills for people with autism : a systematic teaching approach ... Anderson, Stephen R. Series. Topics in autism. Published. Bethesda, MD : Woodbine ... Self-Help Skills for People with Autism: A Systematic ... Self-Help Skills for People with Autism: A Systematic Teaching Approach (- GOOD ; Item Number. 265769074781 ; Brand. Unbranded ; Book Title. Self-Help Skills for ... Self-Help Skills for People with Autism: A Systematic ... Title : Self-Help Skills for People with Autism: A Systematic Teaching Approach (Topics in Autism). Publisher : Woodbine House. First Edition : False. Biology: Concepts and Applications 8th Edition, without ... Biology: Concepts and Applications 8th Edition, without Physiology - by Cecie Starr / Christine A. Evers / Lisa Starr [Cecie Starr] on Amazon.com. Biology Concepts and Applications without ... Biology Concepts and Applications without Physiolog 8th (Eighth) Edition byStarr [Starr] on Amazon.com. *FREE* shipping on qualifying offers. Biology: Concepts and Applications 8th Edition ... Biology: Concepts and Applications 8th Edition, without Physiology - by Cecie Starr / Christine A. Evers / Lisa Starr · Cecie Starr · About the author. Biology: Concepts and Applications 8e "WITHOUT ... Biology: Concepts and Applications 8e "WITHOUT PHYSIOLOGY" by Cecie Starr; Christine A. Evers; Lisa Starr - ISBN 10: 1305022351 - ISBN 13: 9781305022355 ... Biology Concepts and Applications without ... Biology8th edition ; Full Title: Biology: Concepts and Applications without Physiology ; Edition: 8th edition ; ISBN-13: 978-0538739252 ; Format: Paperback/softback. Biology: concepts and applications [8th ed] 9781439046739 ... ... not addressed by science. A scientific theory is a longstanding hypothesis that is useful for making predictions about other phenomena. It is our best way ... Biology: Concepts and Applications without Physiology 8th ... Buy Biology: Concepts and Applications without Physiology 8th edition (9780538739252) by Cecie Starr for up to 90% off at Textbooks.com. Biology Concepts And Applications Without Physiology Price: $0 with Free Shipping - Biology Concepts And Applications Without Physiology (8th Edition) by Cecie Starr, Christine A Evers, Lisa Starr. Biology: Concepts and Applications without ... In the new edition of BIOLOGY: CONCEPTS AND APPLICATIONS, authors Cecie Starr, Christine A. Evers, and Lisa Starr have partnered with the National. bio 233 text book: biology- concepts and ... Presentation on theme: "BIO 233 TEXT BOOK: BIOLOGY- CONCEPTS AND APPLICATIONS: WITHOUT PHYSIOLOGY BY STARR, EVERS AND STARR 8TH EDITION-2011 26-1-2014.