OPERATOR'S MANUAL

ENGLISH

KUBOTA
MOTORE DIESEL

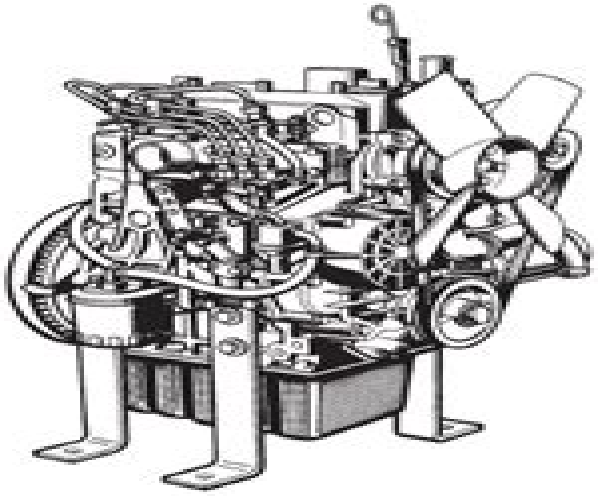

READ AND SAVE THIS BOOK

Kubota

Kubota Engines V1505d Service Manual

Implement & Tractor Publications.
Technical Services Division

Kubota Engines V1505d Service Manual:

The American City & County ,1992-07 *Engine Service Manual* O and R Engines, Incorporated,1969

Troubleshooting and Repair Manual ,1985 Volvo Penta (Seloc) Seloc,2008 This manual covers the topics that a factory service manual designed for factory trained mechanics and a manufacturer owner s manual designed more by lawyers than boat owners these days covers It will take you through the basics of maintaining and repairing your motor step by step to help you understand what the factory trained mechanics already know by heart Page 1 2 **Small Engines Service Manual** Implement & Tractor Publications. Technical Services Division,1954 **Service Manual** Caterpillar Inc,1993 **Aerojet Engine Service Manual** Aerojet-General Corporation,195? *Inboard Engines & Drives Service Manual: Oldsmobile, OMC, Peugeot, Universal, Volvo, Westerbeke and Yanmar gas and diesel engines ... with section on popular inboard drives* ,1984 **Workshop Manual, B.M.C.** ,1954* **Small Engines Service Manual** Technical Publications, Inc,1969 *2-cycle Engine Service Manual* Toro Company,1983 Chilton's Truck and Van Repair Manual ,1971 **Troubleshooting and Repair Manual** ,1986 **Service Manual** Caterpillar Tractor Company,1979

Troubleshooting and Repair Manual A Series Engines ,1990 Service Manual ,2008 Chilton's Truck & Van Repair Manual ,1876 **K-engine Repair Manual** Toyota Jidōsha Hanbai Kabushiki Kaisha. Export-Technical Department,1969

Truck and Van Repair Manual, Gasoline and Diesel Engines Chilton Book Company,1978 *Volvo Service Manual* Volvo, Aktiebolaget,1978

Kubota Engines V1505d Service Manual Book Review: Unveiling the Power of Words

In some sort of driven by information and connectivity, the energy of words has become more evident than ever. They have the capability to inspire, provoke, and ignite change. Such is the essence of the book **Kubota Engines V1505d Service Manual**, a literary masterpiece that delves deep to the significance of words and their affect our lives. Compiled by a renowned author, this captivating work takes readers on a transformative journey, unraveling the secrets and potential behind every word. In this review, we shall explore the book is key themes, examine its writing style, and analyze its overall effect on readers.

http://www.armchairempire.com/results/Resources/Download_PDFS/issues%20in%20cultural%20tourism%20studies.pdf

Table of Contents Kubota Engines V1505d Service Manual

1. Understanding the eBook Kubota Engines V1505d Service Manual
    - The Rise of Digital Reading Kubota Engines V1505d Service Manual
    - Advantages of eBooks Over Traditional Books
2. Identifying Kubota Engines V1505d Service Manual
    - Exploring Different Genres
    - Considering Fiction vs. Non-Fiction
    - Determining Your Reading Goals
3. Choosing the Right eBook Platform
    - Popular eBook Platforms
    - Features to Look for in an Kubota Engines V1505d Service Manual
    - User-Friendly Interface
4. Exploring eBook Recommendations from Kubota Engines V1505d Service Manual
    - Personalized Recommendations
    - Kubota Engines V1505d Service Manual User Reviews and Ratings
    - Kubota Engines V1505d Service Manual and Bestseller Lists

5. Accessing Kubota Engines V1505d Service Manual Free and Paid eBooks
    - Kubota Engines V1505d Service Manual Public Domain eBooks
    - Kubota Engines V1505d Service Manual eBook Subscription Services
    - Kubota Engines V1505d Service Manual Budget-Friendly Options
6. Navigating Kubota Engines V1505d Service Manual eBook Formats
    - ePub, PDF, MOBI, and More
    - Kubota Engines V1505d Service Manual Compatibility with Devices
    - Kubota Engines V1505d Service Manual Enhanced eBook Features
7. Enhancing Your Reading Experience
    - Adjustable Fonts and Text Sizes of Kubota Engines V1505d Service Manual
    - Highlighting and Note-Taking Kubota Engines V1505d Service Manual
    - Interactive Elements Kubota Engines V1505d Service Manual
8. Staying Engaged with Kubota Engines V1505d Service Manual
    - Joining Online Reading Communities
    - Participating in Virtual Book Clubs
    - Following Authors and Publishers Kubota Engines V1505d Service Manual
9. Balancing eBooks and Physical Books Kubota Engines V1505d Service Manual
    - Benefits of a Digital Library
    - Creating a Diverse Reading Collection Kubota Engines V1505d Service Manual
10. Overcoming Reading Challenges
    - Dealing with Digital Eye Strain
    - Minimizing Distractions
    - Managing Screen Time
11. Cultivating a Reading Routine Kubota Engines V1505d Service Manual
    - Setting Reading Goals Kubota Engines V1505d Service Manual
    - Carving Out Dedicated Reading Time
12. Sourcing Reliable Information of Kubota Engines V1505d Service Manual
    - Fact-Checking eBook Content of Kubota Engines V1505d Service Manual
    - Distinguishing Credible Sources
13. Promoting Lifelong Learning

    - Utilizing eBooks for Skill Development
    - Exploring Educational eBooks
14. Embracing eBook Trends
    - Integration of Multimedia Elements
    - Interactive and Gamified eBooks

Kubota Engines V1505d Service Manual Introduction

In the digital age, access to information has become easier than ever before. The ability to download Kubota Engines V1505d Service Manual has revolutionized the way we consume written content. Whether you are a student looking for course material, an avid reader searching for your next favorite book, or a professional seeking research papers, the option to download Kubota Engines V1505d Service Manual has opened up a world of possibilities. Downloading Kubota Engines V1505d Service Manual provides numerous advantages over physical copies of books and documents. Firstly, it is incredibly convenient. Gone are the days of carrying around heavy textbooks or bulky folders filled with papers. With the click of a button, you can gain immediate access to valuable resources on any device. This convenience allows for efficient studying, researching, and reading on the go. Moreover, the cost-effective nature of downloading Kubota Engines V1505d Service Manual has democratized knowledge. Traditional books and academic journals can be expensive, making it difficult for individuals with limited financial resources to access information. By offering free PDF downloads, publishers and authors are enabling a wider audience to benefit from their work. This inclusivity promotes equal opportunities for learning and personal growth. There are numerous websites and platforms where individuals can download Kubota Engines V1505d Service Manual. These websites range from academic databases offering research papers and journals to online libraries with an expansive collection of books from various genres. Many authors and publishers also upload their work to specific websites, granting readers access to their content without any charge. These platforms not only provide access to existing literature but also serve as an excellent platform for undiscovered authors to share their work with the world. However, it is essential to be cautious while downloading Kubota Engines V1505d Service Manual. Some websites may offer pirated or illegally obtained copies of copyrighted material. Engaging in such activities not only violates copyright laws but also undermines the efforts of authors, publishers, and researchers. To ensure ethical downloading, it is advisable to utilize reputable websites that prioritize the legal distribution of content. When downloading Kubota Engines V1505d Service Manual, users should also consider the potential security risks associated with online platforms. Malicious actors may exploit vulnerabilities in unprotected websites to distribute malware or steal personal information. To protect themselves, individuals should ensure their devices have reliable antivirus software installed and validate the legitimacy of the websites

they are downloading from. In conclusion, the ability to download Kubota Engines V1505d Service Manual has transformed the way we access information. With the convenience, cost-effectiveness, and accessibility it offers, free PDF downloads have become a popular choice for students, researchers, and book lovers worldwide. However, it is crucial to engage in ethical downloading practices and prioritize personal security when utilizing online platforms. By doing so, individuals can make the most of the vast array of free PDF resources available and embark on a journey of continuous learning and intellectual growth.

FAQs About Kubota Engines V1505d Service Manual Books

What is a Kubota Engines V1505d Service Manual PDF? A PDF (Portable Document Format) is a file format developed by Adobe that preserves the layout and formatting of a document, regardless of the software, hardware, or operating system used to view or print it. **How do I create a Kubota Engines V1505d Service Manual PDF?** There are several ways to create a PDF: Use software like Adobe Acrobat, Microsoft Word, or Google Docs, which often have built-in PDF creation tools. Print to PDF: Many applications and operating systems have a "Print to PDF" option that allows you to save a document as a PDF file instead of printing it on paper. Online converters: There are various online tools that can convert different file types to PDF. **How do I edit a Kubota Engines V1505d Service Manual PDF?** Editing a PDF can be done with software like Adobe Acrobat, which allows direct editing of text, images, and other elements within the PDF. Some free tools, like PDFescape or Smallpdf, also offer basic editing capabilities. **How do I convert a Kubota Engines V1505d Service Manual PDF to another file format?** There are multiple ways to convert a PDF to another format: Use online converters like Smallpdf, Zamzar, or Adobe Acrobats export feature to convert PDFs to formats like Word, Excel, JPEG, etc. Software like Adobe Acrobat, Microsoft Word, or other PDF editors may have options to export or save PDFs in different formats. **How do I password-protect a Kubota Engines V1505d Service Manual PDF?** Most PDF editing software allows you to add password protection. In Adobe Acrobat, for instance, you can go to "File" -> "Properties" -> "Security" to set a password to restrict access or editing capabilities. Are there any free alternatives to Adobe Acrobat for working with PDFs? Yes, there are many free alternatives for working with PDFs, such as: LibreOffice: Offers PDF editing features. PDFsam: Allows splitting, merging, and editing PDFs. Foxit Reader: Provides basic PDF viewing and editing capabilities. How do I compress a PDF file? You can use online tools like Smallpdf, ILovePDF, or desktop software like Adobe Acrobat to compress PDF files without significant quality loss. Compression reduces the file size, making it easier to share and download. Can I fill out forms in a PDF file? Yes, most PDF viewers/editors like Adobe Acrobat, Preview (on Mac), or various online tools allow you to fill out forms in PDF files by selecting text fields and entering information. Are there any restrictions when working with PDFs?

Some PDFs might have restrictions set by their creator, such as password protection, editing restrictions, or print restrictions. Breaking these restrictions might require specific software or tools, which may or may not be legal depending on the circumstances and local laws.

Find Kubota Engines V1505d Service Manual :

issues in cultural tourism studies
iseki tm3160 tm3200 tm3240 tractor workshop service repair manual 1
isotopes in condensed matter springer series in materials science
iso 128 technical drawings
isuzu ftr series manual
isuzu axiom repair manual 2001 2004
isonic digital camera manuals
iso quality manual guide 34
isotope labeling biomolecules methods enzymology ebook
is 95 cdma and cdma2000 cellularpcs systems implementation
islam in discussie 24 vragen over de islam
iso 33000
isuzu trooper service repair manual 1993 1998
isuzu industrial diesel engine a 4jg1 1999 2005 service repair manual
~~island fact and theory in nature~~

Kubota Engines V1505d Service Manual :

trommeln am fluss sarah rubal google books - May 12 2023
web nov 13 2017 trommeln am fluss sarah rubal persimplex verlag nov 13 2017 fiction 700 pages nordamerika 1755 im siebenjährigen krieg kämpfen die britische und die französische krone um ihre vorherrschaft
trommeln am fluss rubal sarah amazon com tr kitap - Jul 14 2023
web trommeln am fluss rubal sarah amazon com tr kitap Çerez tercihlerinizi seçin Çerez bildirimimizde ayrıntılı şekilde açıklandığı üzere alışveriş yapmanızı sağlamak alışveriş deneyiminizi iyileştirmek ve hizmetlerimizi sunmak için gerekli olan çerezleri ve benzer araçları kullanırız

der ruf der schildkröte trommeln am fluss amazon com tr - Apr 11 2023
web der ruf der schildkröte trommeln am fluss sarah rubal amazon com tr kitap
trommeln deutsch türkisch Übersetzung pons - Nov 06 2022
web Übersetzung deutsch türkisch für trommeln im pons online wörterbuch nachschlagen gratis vokabeltrainer verbtabellen aussprachefunktion
historische romane sarah rubal - Mar 10 2023
web trommeln am fluss ein historischer roman aus dem indigenen amerika der ruf der schildkröte teil i nordamerika 1755 im siebenjährigen krieg kämpfen die britische und die französische krone um ihre vorherrschaft in nordamerika besonders das fruchtbare ohio tal ist das ziel ihrer kolonialen expansionspläne
der ruf der schildkröte trommeln am fluss hardcover - Dec 07 2022
web der ruf der schildkröte trommeln am fluss von sarah rubal bei abebooks de isbn 10 3940528730 isbn 13 9783940528735 persimplex storykeeper hardcover
wer streamt todestrommeln am großen fluß - Jul 02 2022
web jetzt verfügbarkeit von todestrommeln am großen fluß überprüfen todestrommeln am großen fluß ist ein britisch deutscher abenteuerfilm der auf motiven des romans sanders vom strom von edgar wallace basiert
todestrommeln am großen fluß film 1963 moviepilot de - Dec 27 2021
web todestrommeln am großen fluß ist ein abenteuerfilm aus dem jahr 1963 von lawrence huntington mit richard todd und marianne koch komplette handlung und informationen zu todestrommeln am großen
todestrommeln am großen fluß edgar wallace wiki fandom - Apr 30 2022
web todestrommeln am großen fluß englischsprachiger titel death drums along the river ist ein film des britischen regisseurs lawrence huntington aus dem jahr 1963 er baut auf dem roman sanders vom strom originaltitel sanders of the river von edgar wallace auf
edgar wallace todestrommeln am großen fluss filmjuwelen - Sep 04 2022
web edgar wallace todestrommeln am großen fluss filmjuwelen richard todd darsteller marianne koch darsteller lawrence huntington regisseur alterseinstufung freigegeben ab 12 jahren format dvd 4 2 48 sternebewertungen
trommeln auf türkisch übersetzen deutsch tuerkisch net - Feb 26 2022
web deutsch tuerkisch net trommeln auf türkisch übersetzen trommeln deutsch türkische übersetzung trommeln in türkisch
todestrommeln am großen fluß wikipedia - Jun 13 2023
web todestrommeln am großen fluß ist ein britisch deutscher abenteuerfilm englischsprachiger titel death drums along the river der auf motiven des romans sanders vom strom originaltitel sanders of the river von edgar wallace basiert die

hauptrollen sind mit richard todd marianne koch albert lieven vivi bach sowie walter rilla besetzt

todestrommeln am großen fluß dvd film trailer kritik - Aug 03 2022

web in der hölle des schwarzen kontinents und wieder einmal ein jubeltag für filmische jäger und sammler denn todestrommeln am großen fluss war einer der letzten edgar wallace filme die es noch gar nicht auf dvd gab

trommeln am fluss german edition kindle edition amazon com - Jan 08 2023

web jan 1 2018 trommeln am fluss german edition kindle edition by rubal sarah download it once and read it on your kindle device pc phones or tablets use features like bookmarks note taking and highlighting while reading trommeln am

trommeln am fluss ebook rubal sarah amazon de bücher - Feb 09 2023

web weltliteratur oder dem autor folgen sarah rubal trommeln am fluss kindle ausgabe von sarah rubal autor format kindle ausgabe 141 sternebewertungen alle formate und editionen anzeigen kindle 0 00 dieser und millionen weitere titel sind in kindle unlimited verfügbar oder für 4 99 kaufen

trommeln am fluss by sarah rubal goodreads - Aug 15 2023

web trommeln am fluss book read reviews from world s largest community for readers nordamerika 1755 im siebenjährigen krieg kämpfen die britische und die

todestrommeln am großen fluß film 1963 moviebreak de - Mar 30 2022

web todestrommeln am großen fluß film 1963 polizeiinspektor sanders soll für ruhe und ordnung in der afrikanischen kolonie gondra die nur vom erdnussanbau lebt sorgen

todestrommeln am großen fluß wikiwand - Oct 05 2022

web todestrommeln am großen fluß ist ein britisch deutscher abenteuerfilm der auf motiven des romans sanders vom strom von edgar wallace basiert die hauptrollen sind mit richard todd marianne koch albert lieven vivi bach sowie walter rilla besetzt

todestrommeln am großen fluß film 1963 trailer kritik kino - Jan 28 2022

web handlung und hintergrund in einer britischen kolonie in afrika wird ein polizist bei der verfolgung eines schmugglers ermordet polizeiinspektor harry sanders nimmt sich des falles an zunächst

trommeln auf türkisch übersetzen deutsch türkisch wörterbuch - Jun 01 2022

web tef çalmak trommeln v trommelte hat getrommelt davul çalmak trommeln v trommelte hat getrommelt teneke çalmak 14 indirekte treffer gefunden für trommeln deutsch türkisch die trommeln ase sub f

cammino di santiago come funziona percorsi tappe e km - Apr 21 2022

come fare il cammino di santiago percorso durata e tappe - Jun 23 2022

cammino di santiago la guida online completa e - Nov 28 2022
web siamo la tua agenzia per fare il cammino di santiago possiamo organizzare il tuo viaggio dall italia e siamo abituati a risolvere tutte le necessità dei pellegrini del
come fare il cammino di santiago tutti i modi possibili - Sep 26 2022
web mar 23 2023 facciamo quattro chiacchiere su come organizzare il cammino di santiago e su casa aspettarci una volta che avremo iniziato 00 35 le scarpe01 03 l
il cammino di santiago dall italia agenzia per organizzare il - Feb 17 2022

organizzare il cammino di santiago info e curiosità - Dec 30 2022
web il cammino di santiago e cosa portare la lista dopo averne accennato in modo generico dell equipaggiamento per il cammino di santiago vediamo qui in maniera più
organizzare il cammino di santiago - Aug 06 2023
web jun 7 2022 il cammino di santiago è il percorso religioso tra i più conosciuti amati e affrontati nel mondo È il modo più diretto per entrare in contatto con la tua spiritualità
come organizzare il cammino di santiago youtube - Dec 18 2021

cammino di santiago come organizzare il viaggio my - Apr 02 2023
web il cammino francese prevede 31 tappe in partenza da saint jean pied de port attraverserete regioni come la castiglia e la navarra visiterete località come pamplona
come organizzare il cammino di santiago passo passo - Sep 07 2023
web il manuale del cammino di santiago è nato dalla guida online camminosantiagodecompostela it in questo manuale sono contenute tutte le
sai per il cammino di santiago cosa portare ecco 3 liste - Mar 21 2022

come organizzare il cammino di santiago finalment - Nov 16 2021

il manuale del cammino di santiago - Jun 04 2023
web per quanto riguarda la data di partenza bisogna ovviamente considerare principalmente la stagione in cui si vuole fare il cammino i giorni a disposizione e il tratto che si vuole
come organizzare il cammino di santiago - Oct 08 2023

web scegli l itinerario tra i i molti del cammino di santiago in galizia crea il tuo cammino scegliendo i giorni i chilometri e la data di inizio accedi all area personale per vedere il
viaggio organizzato e gruppi per il cammino di santiago 2023 - May 23 2022

come prepararsi al cammino di santiago l allenamento - May 03 2023
web cammino portoghese questo cammino è lungo circa 760 chilometri e parte da ponte de lima in portogallo per arrivare a santiago percorrerete tutto il litorale a picco
home santiagotour il cammino di santiago organizzato - Jan 19 2022

organizza cammino di santiago in galicia sito ufficiale - Jul 05 2023
web come fare il cammino di santiago sebbene il modo preferito di fare il cammino di santiago sia ancora a piedi molti pellegrini scelgono di fare il loro pellegrinaggio in
cammino di santiago consigli percorsi tappe e km travellairs - Oct 28 2022
web il cammino di santiago è un pellegrinaggio che molte persone intraprendono come cammino spirituale il percorso è in genere lungo circa 800 km e richiede dalle sei alle
cammino di santiago come affrontare il viaggio e le tappe da fare - Jul 25 2022

come organizzare il cammino di santiago guida e - Mar 01 2023
web jul 19 2018 ci sono molte agenzie in italia che offrono il cammino di santiago organizzato in gruppo o in solitaria solitamente prenotare un cammino di santiago
come realizzare il cammino cammino di santiago in - Jan 31 2023
web jul 10 2023 cammino di santiago km quanti sono il cammino di santiago è lungo 800km e puoi decidere di affrontarli tutti o solo in parte scegliendo uno dei diversi
cammino di santiago periodo migliore stagioni e clima - Aug 26 2022
web it is your agreed own time to play act reviewing habit along with guides you could enjoy now is come organizzare il cammino di santiago finalment below independent people
il mio capo È un idiota 1 wattpad - Jun 05 2022
web il mio capo È un idiota romance ex il mio capo È un coglione la storia sarà disponibile dal 14 novembre in ebook e cartaceo su amazon sicilia chiara lo salvo dopo aver collezionato un paio di licenziamenti in pochi mesi a causa del suo essere perennemente imbranata viene

il mio capo è un idiota italian edition edición kindle - Jul 06 2022
web il mio capo è un idiota italian edition ebook blioju andreea m amazon com mx tienda kindle saltar al contenido principal com mx hola elige tu dirección tienda kindle hola identifícate cuenta y listas devoluciones y pedidos carrito todo vender
andreea m blioju il mio capo è un idiota ti odio ma non - May 16 2023
web aug 12 2022 andreea m blioju il mio capo è un idiota ti odio ma non troppo un campione tutto mio 2022 epubil mio capo è un idiota per chiara la vita è un pendolo che oscilla tra un lavoro e un altro la sua singolare capacità di attirare guai la porta a detenere il record di licenziamenti mondiale
il mio capo è un idiota italian edition format kindle amazon ca - Sep 08 2022
web il mio capo è un idiota italian edition ebook blioju andreea m amazon ca boutique kindle
il mio capo è un idiota italian edition versión kindle amazon es - Aug 07 2022
web il mio capo è un idiota italian edition ebook blioju andreea m amazon es tienda kindle
il mio capo è un idiota italian edition tapa blanda amazon com - Oct 09 2022
web amazon com il mio capo è un idiota italian edition 9781710218138 blioju andreea m libros
il mio capo è un idiota italian edition ebook kindle - Jan 12 2023
web compre o ebook il mio capo è un idiota italian edition de blioju andreea m na loja ebooks kindle encontre ofertas os livros mais vendidos e dicas de leitura na amazon brasil
amazon il mio capo è un idiota blioju andreea m foreign - May 04 2022
web nov 28 2019 amazon□□□□□□il mio capo è un idiota□□□□□□□ □□amazon□□□□□□□□□□□□ blioju andreea m □□□□ □□□□□□□□□□□ □□□□□□
il mio capo è un idiota italian edition kindle edition amazon in - Nov 10 2022
web il mio capo è un idiota italian edition ebook blioju andreea m amazon in kindle store
il mio capo è un idiota blioju andreea m amazon de bücher - Mar 14 2023
web il mio capo è un idiota blioju andreea m isbn 9781710218138 kostenloser versand für alle bücher mit versand und verkauf duch amazon
il mio capo È un idiota andreea michela wattpad - Jul 18 2023
web sep 4 2018 ex il mio capo È un coglione la storia sarà disponibile dal 14 novembre in ebook e cartaceo su amazon sicilia chiara lo salvo dopo aver collezionato un
il mio capo è un idiota italian edition pasta blanda - Apr 03 2022
web il mio capo è un idiota italian edition blioju andreea m amazon com mx libros
il mio capo è un idiota italian edition kindle ausgabe amazon de - Feb 13 2023

web il mio capo è un idiota italian edition ebook blioju andreea m amazon de kindle shop

il mio capo è un idiota paperback amazon in - Dec 11 2022

web amazon in buy il mio capo è un idiota book online at best prices in india on amazon in read il mio capo è un idiota book reviews author details and more at amazon in free delivery on qualified orders

il capo dei capi wikipedia - Feb 01 2022

web il capo dei capi the boss of the bosses is a six part italian miniseries which debuted on canale 5 between october and november 2007 it tells the story of salvatore riina alias totò u curtu totò the short a mafioso boss from corleone sicily riina is played by palermo born actor claudio gioè and the series was directed by alexis sweet and

il mio capo è un idiota italian edition kindle edition - Jun 17 2023

web nov 14 2019 il mio capo è un idiota italian edition kindle edition by blioju andreea m download it once and read it on your kindle device pc phones or tablets use features like bookmarks note taking and highlighting while reading il mio capo è

recensione a il mio capo è un idiota di andreea m blioju - Mar 02 2022

web aug 18 2023 recensioni el recensioni rosanna recensioni violet recensioni siria venerdì 18 agosto 2023 recensione a il mio capo è un idiota di andreea m blioju genere commedia romantica editore self publishing data d uscita 14 novembre 2019 pagine 596 prezzo ebook 0 89 cartaceo 15 00

il mio capo è un idiota ti odio ma non troppo un campione - Apr 15 2023

web aug 10 2022 il mio capo è un idiota ti odio ma non troppo un campione tutto mio italian edition kindle edition by blioju andreea m download it once and read it on your kindle device pc phones or tablets

il mio capo è un idiota blioju andreea m amazon it libri - Aug 19 2023

web la ex di steven che da ragazza timida e schiva diventa una traditrice della peggior specie proprio non ci sta poi a un tratto emerge il tema della bulimia come a voler elevare il libro a qualcosa di più profondo

il mio capo è un idiota formato kindle amazon it - Sep 20 2023

web la ex di steven che da ragazza timida e schiva diventa una traditrice della peggior specie proprio non ci sta poi a un tratto emerge il tema della bulimia come a voler elevare il libro a qualcosa di più profondo