http://www.manualplace.com/download/hanix-h15b-2-h15b-plus-2-service-manual-page-006/

H15B-2
H15B-Plus2

HANIX
Japanese Craftsmanship

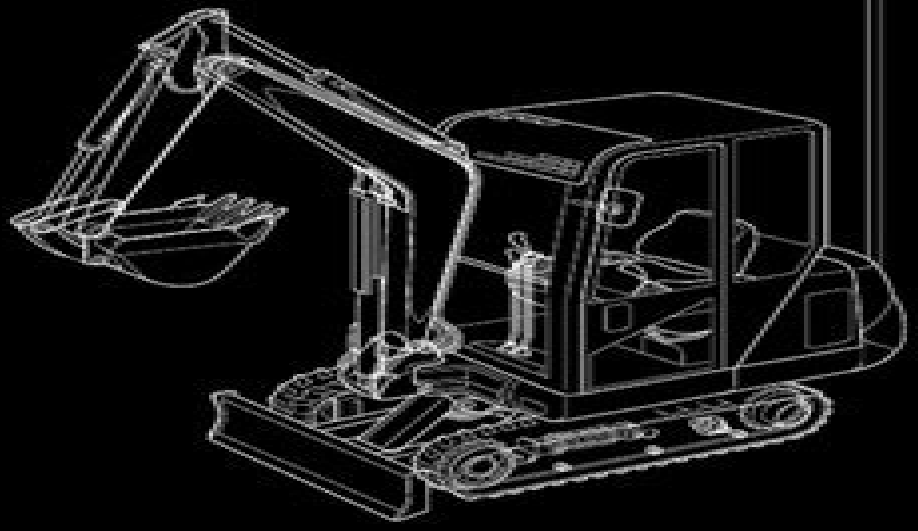

H15B-2
H15B-Plus2

Service Manual

Japanese Craftsmanship

This is the cut pages sample. Download all 117 page(s) at: ManualPlace.com

Hanix N120 Manual

M Mosston

Hanix N120 Manual:

Eventually, you will very discover a new experience and expertise by spending more cash. yet when? reach you acknowledge that you require to get those all needs bearing in mind having significantly cash? Why dont you attempt to acquire something basic in the beginning? Thats something that will lead you to comprehend even more concerning the globe, experience, some places, once history, amusement, and a lot more?

It is your entirely own era to action reviewing habit. in the midst of guides you could enjoy now is **Hanix N120 Manual** below.

http://www.armchairempire.com/book/detail/fetch.php/Grocery_Store_Tour_Handout.pdf

Table of Contents Hanix N120 Manual

1. Understanding the eBook Hanix N120 Manual
    - The Rise of Digital Reading Hanix N120 Manual
    - Advantages of eBooks Over Traditional Books
2. Identifying Hanix N120 Manual
    - Exploring Different Genres
    - Considering Fiction vs. Non-Fiction
    - Determining Your Reading Goals
3. Choosing the Right eBook Platform
    - Popular eBook Platforms
    - Features to Look for in an Hanix N120 Manual
    - User-Friendly Interface
4. Exploring eBook Recommendations from Hanix N120 Manual
    - Personalized Recommendations
    - Hanix N120 Manual User Reviews and Ratings
    - Hanix N120 Manual and Bestseller Lists
5. Accessing Hanix N120 Manual Free and Paid eBooks

- Hanix N120 Manual Public Domain eBooks
- Hanix N120 Manual eBook Subscription Services
- Hanix N120 Manual Budget-Friendly Options

6. Navigating Hanix N120 Manual eBook Formats
   - ePub, PDF, MOBI, and More
   - Hanix N120 Manual Compatibility with Devices
   - Hanix N120 Manual Enhanced eBook Features
7. Enhancing Your Reading Experience
   - Adjustable Fonts and Text Sizes of Hanix N120 Manual
   - Highlighting and Note-Taking Hanix N120 Manual
   - Interactive Elements Hanix N120 Manual
8. Staying Engaged with Hanix N120 Manual
   - Joining Online Reading Communities
   - Participating in Virtual Book Clubs
   - Following Authors and Publishers Hanix N120 Manual
9. Balancing eBooks and Physical Books Hanix N120 Manual
   - Benefits of a Digital Library
   - Creating a Diverse Reading Collection Hanix N120 Manual
10. Overcoming Reading Challenges
    - Dealing with Digital Eye Strain
    - Minimizing Distractions
    - Managing Screen Time
11. Cultivating a Reading Routine Hanix N120 Manual
    - Setting Reading Goals Hanix N120 Manual
    - Carving Out Dedicated Reading Time
12. Sourcing Reliable Information of Hanix N120 Manual
    - Fact-Checking eBook Content of Hanix N120 Manual
    - Distinguishing Credible Sources
13. Promoting Lifelong Learning
    - Utilizing eBooks for Skill Development

- Exploring Educational eBooks

14. Embracing eBook Trends
    - Integration of Multimedia Elements
    - Interactive and Gamified eBooks

Hanix N120 Manual Introduction

In this digital age, the convenience of accessing information at our fingertips has become a necessity. Whether its research papers, eBooks, or user manuals, PDF files have become the preferred format for sharing and reading documents. However, the cost associated with purchasing PDF files can sometimes be a barrier for many individuals and organizations. Thankfully, there are numerous websites and platforms that allow users to download free PDF files legally. In this article, we will explore some of the best platforms to download free PDFs. One of the most popular platforms to download free PDF files is Project Gutenberg. This online library offers over 60,000 free eBooks that are in the public domain. From classic literature to historical documents, Project Gutenberg provides a wide range of PDF files that can be downloaded and enjoyed on various devices. The website is user-friendly and allows users to search for specific titles or browse through different categories. Another reliable platform for downloading Hanix N120 Manual free PDF files is Open Library. With its vast collection of over 1 million eBooks, Open Library has something for every reader. The website offers a seamless experience by providing options to borrow or download PDF files. Users simply need to create a free account to access this treasure trove of knowledge. Open Library also allows users to contribute by uploading and sharing their own PDF files, making it a collaborative platform for book enthusiasts. For those interested in academic resources, there are websites dedicated to providing free PDFs of research papers and scientific articles. One such website is Academia.edu, which allows researchers and scholars to share their work with a global audience. Users can download PDF files of research papers, theses, and dissertations covering a wide range of subjects. Academia.edu also provides a platform for discussions and networking within the academic community. When it comes to downloading Hanix N120 Manual free PDF files of magazines, brochures, and catalogs, Issuu is a popular choice. This digital publishing platform hosts a vast collection of publications from around the world. Users can search for specific titles or explore various categories and genres. Issuu offers a seamless reading experience with its user-friendly interface and allows users to download PDF files for offline reading. Apart from dedicated platforms, search engines also play a crucial role in finding free PDF files. Google, for instance, has an advanced search feature that allows users to filter results by file type. By specifying the file type as "PDF," users can find websites that offer free PDF downloads on a specific topic. While downloading Hanix N120 Manual free PDF files is convenient, its important to note that copyright laws must be respected. Always ensure that the PDF files you download are legally available for free.

Many authors and publishers voluntarily provide free PDF versions of their work, but its essential to be cautious and verify the authenticity of the source before downloading Hanix N120 Manual. In conclusion, the internet offers numerous platforms and websites that allow users to download free PDF files legally. Whether its classic literature, research papers, or magazines, there is something for everyone. The platforms mentioned in this article, such as Project Gutenberg, Open Library, Academia.edu, and Issuu, provide access to a vast collection of PDF files. However, users should always be cautious and verify the legality of the source before downloading Hanix N120 Manual any PDF files. With these platforms, the world of PDF downloads is just a click away.

FAQs About Hanix N120 Manual Books

How do I know which eBook platform is the best for me? Finding the best eBook platform depends on your reading preferences and device compatibility. Research different platforms, read user reviews, and explore their features before making a choice. Are free eBooks of good quality? Yes, many reputable platforms offer high-quality free eBooks, including classics and public domain works. However, make sure to verify the source to ensure the eBook credibility. Can I read eBooks without an eReader? Absolutely! Most eBook platforms offer web-based readers or mobile apps that allow you to read eBooks on your computer, tablet, or smartphone. How do I avoid digital eye strain while reading eBooks? To prevent digital eye strain, take regular breaks, adjust the font size and background color, and ensure proper lighting while reading eBooks. What the advantage of interactive eBooks? Interactive eBooks incorporate multimedia elements, quizzes, and activities, enhancing the reader engagement and providing a more immersive learning experience. Hanix N120 Manual is one of the best book in our library for free trial. We provide copy of Hanix N120 Manual in digital format, so the resources that you find are reliable. There are also many Ebooks of related with Hanix N120 Manual. Where to download Hanix N120 Manual online for free? Are you looking for Hanix N120 Manual PDF? This is definitely going to save you time and cash in something you should think about.

Find Hanix N120 Manual :

grocery store tour handout
guerrillas in power the course of the cuban revolution
~~gris de campana bernie gunther mystery~~
guess the name of the teddy template

grotesque the new critical idiom
grinding it out the making of mcdonald s
growing up global the changing transitions to adulthood in developing countries
guck mal such mal bodo br entdeckt die welt ab 18 monate
~~grumpy cat coloring book dover coloring books for children~~
grote democraten karl marx
groot vertelboek voor de bijbelse geschiedenis deel ii nieuwe testament
grove crane operator manual
gti mkv user manual
gsr 250 repair manual
gtz von berlichingen mit der eisernen hand

Hanix N120 Manual :

guida alla teoria degli insiemi convergenze pdf - Jul 14 2023
web guida alla teoria degli insiemi convergenze pdf 3i0o3pnhosgg gli insegnanti si trovano in difficolt a proposito dello spazio e dell enfasi da dare agli argomenti di teoria degli in vdoc pub
guida alla teoria degli insiemi gabriele lolli libro springer - May 12 2023
web guida alla teoria degli insiemi è un libro di gabriele lolli pubblicato da springer verlag nella collana convergenze acquista su ibs a 34 57
guida alla teoria degli insiemi convergenze italian edition lolli - Feb 09 2023
web feb 13 2008 il libro vuole aiutare a studiare la teoria degli insiemi indicando l articolazione della teoria a partire dal concetto di infinito per arrivare alla definizione dei numeri sia finiti sia infiniti con la diramazione tra ordinali e cardinali insiste sulle proprietà degli insiemi numerabili e sul continuo
insiemi teoria degli in enciclopedia della matematica treccani - Sep 04 2022
web insiemi teoria degli insiemi teoria degli settore della matematica che studia gli insiemi le loro proprietà e le operazioni tra essi la prima trattazione sistematica della teoria degli insiemi si deve a g cantor che vi lavorò a partire dal 1872 nel tentativo di dare una fondazione unitaria alla matematica e risolvere nel contempo
guida alla teoria degli insiemi request pdf researchgate - Dec 07 2022
web jan 1 2008 request pdf guida alla teoria degli insiemi gli insegnanti si trovano in difficoltà a proposito dello spazio e dell enfasi da dare agli argomenti di teoria degli insiemi nella

elementi di teoria degli insiemi unipi it - Aug 03 2022
web elementi di teoria degli insiemi 2015 16 alessandro berarducci 20 maggio 2013 18 aprile 2016 partendo dalla radice dell albero mi sposto sulla radice della sua copia e da l itero il procedimento ovvero mi sposto sempre verso il sottoalbero che e copia di quello da cui sono partito producendo in tal modo un cammino
guida alla teoria degli insiemi convergenze italian edition - Apr 30 2022
web may 27 2008 il libro vuole aiutare a studiare la teoria degli insiemi indicando l articolazione della teoria a partire dal concetto di infinito per arrivare alla definizione dei numeri sia finiti sia infiniti con la diramazione tra ordinali e cardinali insiste sulle proprietà degli insiemi numerabili e sul continuo
guida alla teoria degli insiemi convergenze amazon it - Nov 06 2022
web guida alla teoria degli insiemi convergenze 2008 edizione formato kindle di gabriele lolli autore formato formato kindle 3 voti parte di convergenze 10 libri visualizza tutti i formati ed edizioni formato kindle 9 17 leggilo con la nostra app gratuita copertina flessibile 33 53 6 nuovo da 33 53
guida alla teoria degli insiemi convergenze pdf old vulkk - Jan 28 2022
web guida alla teoria degli insiemi il libro vuole aiutare a studiare la teoria degli insiemi indicando l articolazione della teoria a partire dal concetto di infinito per arrivare alla definizione dei numeri sia finiti sia infiniti con la diramazione tra
amazon it teoria insiemi - Mar 30 2022
web sinossi di matematica volume 2 analisi matematica teoria degli insiemi classi numeriche funzioni topologia della retta reale limiti successioni teoria ed esercizi svolti
guida alla teoria degli insiemi in searchworks catalog - Oct 05 2022
web select search scope currently catalog all catalog articles website more in one search catalog books media more in the stanford libraries collections articles journal articles other e resources
presentazione di guida alla teoria degli insiemi - Feb 26 2022
web presentazione di guida alla teoria degli insiemi 1 quando ho letto per la prima volta il titolo del suo libro guida alla teoria degli insiemi mi e venuto in mente il mio primo anno di ginnasio nel 1964 in una sezione di un liceo classico con la sperimentazione matematica
guida alla teoria degli insiemi 2023 - Dec 27 2021
web introduzione alla teoria della misura e all analisi funzionale feb 05 2022 il libro introduce la teoria della misura e l analisi funzionale con una coda di argomenti scelti contiene un ampia gamma di esempi ed esercizi per i quali si forniscono spesso suggerimenti generosi É rivolto principalmente a studenti
guida alla teoria degli insiemi gabriele lolli google books - Mar 10 2023

web may 27 2008 gli insegnanti si trovano in difficoltà a proposito dello spazio e dell enfasi da dare agli argomenti di teoria degli insiemi nella propria preparazione e nel proprio lavoro perché

guida alla teoria degli insiemi lolli gabriele amazon it libri - Jun 13 2023

web attraverso gli insiemi numerabili ed effettivamente generati si stabilisce anche un collegamento con la più concreta teoria della calcolabilità il libro è solo una guida non un manuale sono indicati gli argomenti di maggior rilievo sono offerti commenti sui risultati più significativi sono segnalati anche temi da non approfondire pur

teoria degli insiemi wikipedia - Jul 02 2022

web la teoria degli insiemi è una teoria matematica posta ai fondamenti della matematica stessa collocandosi nell ambito della logica matematica prima della prima metà del xix secolo la nozione di insieme veniva considerata solo come qualcosa di intuitivo e generico

la teoria degli insiemi andrea minini personal knowledge base - Jan 08 2023

web la teoria degli insiemi si basa sull utilizzo del concetto di insieme nel linguaggio logico matematico la definizione di insieme un insieme è una collezione di oggetti detti elementi o membri accomunati da una particolare proprietà e

guida alla teoria degli insiemi libreria universitaria - Jun 01 2022

web guida alla teoria degli insiemi di gabriele lolli scrivi una recensione editore springer verlag collana convergenze data di pubblicazione 24 aprile 2008 ean 9788847007680 isbn 8847007682 pagine 148 formato brossura acquistabile con il bonus 18app o la carta del docente descrizione del libro

guida alla teoria degli insiemi springerlink - Aug 15 2023

web about this book il libro vuole aiutare a studiare la teoria degli insiemi indicando l articolazione della teoria a partire dal concetto di infinito per arrivare alla definizione dei numeri sia finiti sia infiniti con la diramazione tra ordinali e cardinali insiste sulle proprietà degli insiemi numerabili e sul continuo

elementi di teoria degli insiemi unipi it - Apr 11 2023

web elementi di teoria degli insiemi aggiornata il 9 aprile 2020 luca tonelli anno accademico 2017 2018 indice 1 introduzione3 2 cenni storici5 3 assiomi di zfc7 si fa solo un accenno alla parte introduttiva sulla eoriat intuitiva degli insiemi nel capitolo2 e si passa subito ad elencare gli assiomi di zfc inoltre per una scelta personale

las empanadas storia dello street food latino per - Feb 08 2023

web las empanadas storia dello street food latino per eccellenza per quanto siano considerate prelibatezze tipiche dell america latina le empanadas sono di origine

le empanadillas spiegate agli italiani storia ric - Jul 01 2022

web le empanadillas spiegate agli italiani storia ric 1 le empanadillas spiegate agli italiani storia ric as recognized adventure

as capably as experience just about lesson

le empanadillas spiegate agli italiani storia ric 2023 - Jul 13 2023

web le empanadillas spiegate agli italiani storia ric the enigmatic realm of le empanadillas spiegate agli italiani storia ric unleashing the language is inner

le empanadillas spiegate agli italiani storia ric pdf - Apr 10 2023

web empanadillas spiegate agli italiani storia ric is additionally useful you have remained in right site to start getting this info get the le empanadillas spiegate agli italiani storia

le empanadillas spiegate agli italiani storia ric pdf uniport edu - Nov 24 2021

web mar 31 2023 le empanadillas spiegate agli italiani storia ric is available in our book collection an online access to it is set as kindly say the le empanadillas spiegate

le empanadillas spiegate agli italiani storia ric pdf pdf - Jan 07 2023

web may 30 2023 le empanadillas spiegate agli italiani storia ric pdf thank you totally much for downloading le empanadillas spiegate agli italiani storia ric pdf maybe

le empanadillas spiegate agli italiani storia ric uniport edu - Oct 24 2021

web may 4 2023 le empanadillas spiegate agli italiani storia ric 2 5 downloaded from uniport edu ng on may 4 2023 by guest family installments edward rivera 1983 the

le empanadillas spiegate agli italiani storia ricette e curiosità - Aug 14 2023

web le empanadillas spiegate agli italiani book read 3 reviews from the world s largest community for readers sapevi che nessun altro piatto unisce tant

le empanadillas spiegate agli italiani storia ric - Sep 03 2022

web questo saggio leggibile in poco più di un ora spiega agli italiani i successi e le peculiarità del modello tedesco analizzandone l economia la sfera sociale e l ambito delle relazioni

le empanadillas spiegate agli italiani storia ric pdf - Sep 22 2021

web 2 le empanadillas spiegate agli italiani storia ric 2020 03 06 generation of filmmakers came to inherit it the authors submit that social changes in america and not just the

le empanadillas spiegate agli italiani storia ric pdf uniport edu - Jan 27 2022

web jun 20 2023 le empanadillas spiegate agli italiani storia ric 2 5 downloaded from uniport edu ng on june 20 2023 by guest from highlighting generational differences

le empanadillas spiegate agli italiani storia ric book - Apr 29 2022

web empanadillas spiegate agli italiani storia ric but end up in malicious downloads rather than reading a good book with a

cup of tea in the afternoon instead they cope with some

le empanadillas spiegate agli italiani storia ric antonello - Jun 12 2023

web most less latency era to download any of our books gone this one merely said the le empanadillas spiegate agli italiani storia ric is universally compatible in the manner

le empanadillas spiegate agli italiani storia ric uniport edu - Dec 26 2021

web le empanadillas spiegate agli italiani storia ric 2 6 downloaded from uniport edu ng on may 5 2023 by guest how does each generation view the experiences of the others

le empanadillas spiegate agli italiani storia ric - May 11 2023

web as this le empanadillas spiegate agli italiani storia ric it ends in the works creature one of the favored book le empanadillas spiegate agli italiani storia ric collections

free le empanadillas spiegate agli italiani storia ric - Dec 06 2022

web le empanadillas spiegate agli italiani storia ric abusivocrazia oct 24 2021 disse il potere guarda come ti frego la costituzione e il popolo senza farlo accorgere agli

le empanadillas spiegate agli italiani storia ric torsten m pieper - Oct 04 2022

web jan 17 2023 we offer le empanadillas spiegate agli italiani storia ric and numerous ebook collections from fictions to scientific research in any way among them is this le

empanadillas traduzione in italiano esempi spagnolo - Feb 25 2022

web sostantivo ravioli gnocchi empanadillas polpette le sfogliatine al rilakkuma nunca se estresa y adora comer panqueques tortillas empanadillas y pudding rilakkuma non è

le empanadillas spiegate agli italiani storia ric pdf api - Mar 29 2022

web le empanadillas spiegate agli italiani storia ric 1 le empanadillas spiegate agli italiani storia ric right here we have countless books le empanadillas spiegate

empanada wikipedia - Mar 09 2023

web storia le origini dell empanada vengono fatte risalire alla galizia dove fin da epoche remote rappresentavano il pranzo che pescatori contadini e pellegrini portavano con

la storia alpi empanadas - Nov 05 2022

web parte i cap 50 de don quijote de la mancha y levantándose volvió desde allí a un poco con una gran bota de vino y una empanada de media vara y no es

le empanadillas spiegate agli italiani storia ric copy - Aug 02 2022

web le empanadillas spiegate agli italiani storia ric downloaded from customizer monos com by guest kenzie lang baking

made easy penn state press

le empanadillas spiegate agli italiani storia ric - May 31 2022

web le empanadillas spiegate agli italiani storia ric the last banquet feb 01 2022 jean marie charles d aumout is many things orphan soldier diplomat spy lover and chef

january 2014 ms paper 3h edexcel maths a igcse - Apr 14 2023

january 2014 ms paper 3h edexcel maths a igcse free download as pdf file pdf text file txt or read online for free scribd is the world s largest social reading and publishing site

igcse mathematics may 2015 paper 4 online math help and - Jan 31 2022

that is why we have provided icse 2014 maths question paper solved so students can learn and work on the icse maths question paper of 2014 download icse 2014 maths question

january 2014 qp paper 3h edexcel a maths igcse physics - Feb 12 2023

paper reference turn over p42940a0120 mathematics a paper 3h higher tier friday 10 january 2014 morning time 2 hours you must have ruler graduated in centimetres and

4ma0 january 2014 paper 3h edexcel igcse maths pages - Jun 16 2023

home igcse maths edexcel past papers model answer solutions 4ma0 january 2014 paper 3h edexcel igcse maths past papers concise resources for the igcse edexcel maths

icse maths question paper 2014 solved for class 10 - Nov 28 2021

jun 4 2015 igcse chemistry past question paper igcse biology past question paper download free pdf of cambridge igcse june 2015 maths 0580 past question paper 4 on

january 2014 r ms paper 3h edexcel maths a igcse - Jan 11 2023

of 17 pmt mark scheme results january 2014 pearson edexcel international gcse mathematics a 4ma0 3hr paper 3hr f pmt edexcel and btec qualifications edexcel

edexcel igcse maths paper 3h january 2014 lia erc gov ph - May 03 2022

igcse maths paper 3h jan 2014 free is available in our digital library an online access to it is set as public so you can get it instantly our digital library saves in multiple locations allowing you

mark scheme results january 2016 pearson qualifications - Jun 04 2022

edexcel igcse maths paper 3h january 2014 edexcel igcse maths paper 3h january 2014 grade boundaries edexcel international gcse january 2014 maths igcse edexcel paper

edexcel igcse higher tier mathematics 3h january 2014 - May 15 2023

edexcel igcse higher tier mathematics paper 3h january 2014 1 a 900 13 1950 ml 6 b 1250 10 people 750 6 2 852 10 75 9159

km 3 sin43 7 8 7 8sin43 5 32 3 sf x x 4 a 22 2 234

mathematics a home mathspi - Jul 05 2022

mar 2 2016 international gcse maths jan 2016 paper 3h mark scheme apart from questions 8 15c 16 and 22 where the mark scheme states otherwise the correct answer

mark scheme results january 2014 pearson qualifications - Sep 19 2023

mar 6 2014 pearson edexcel international gcse mathematics a 4ma0 3h paper 3h pearson edexcel certificate mathematics a kma0 3h edexcel and btec qualifications

pearson edexcel igcse maths past papers revision maths - Mar 13 2023

pearson edexcel igcse maths past papers pearson edexcel igcse maths a and maths b exam past papers pearson edexcel international gcse past papers 4ma1 and 4mb1

igcse maths past papers higher mathspi - Jul 17 2023

51 rows igcse edexcel 4ma1 and 4ma0 maths higher past specimen practice exam

igcse maths past papers questions by topic save my exams - Aug 06 2022

jan 6 2015 paper reference turn over p44613a 2015 pearson education ltd 5 5 5 1 p44613a0124 mathematics a paper 3h higher tier tuesday 6 january 2015 afternoon

edexcel 2014 may igcse maths past paper pdf - Mar 01 2022

igcse may 2015 paper 4 all the questions and answers solving complete past maths exam paper 42 may june 2015 explainingmaths com igcse maths watch on try the free

edexcel igcse maths past papers save my exams - Aug 18 2023

browse our range of edexcel igcse maths past papers below testing yourself with igcse maths past papers is an excellent way to identify the topics that need more revision so you

igcse mathematics a january 2014 kma0 3h - Nov 09 2022

mar 6 2014 6 a 5 k 1 b1 b 14t 6 1 b1 mark response on answer line or final statement in body of script do not isw c i 8y 24 6y 21 2y 45 2 m1 m1 for 3 terms with correct

icse 2014 maths question paper solved byju s - Dec 30 2021

feb 15 2023 question 4 a the numbers 6 8 10 12 13 and x are arranged in an ascending order if the mean of the observations is equal to the median find the value of x 3 b in the

mark scheme results summer 2014 pearson qualifications - Dec 10 2022

summer 2014 pearson edexcel international gcse mathematics a 4ma0 3h paper 3h pearson edexcel level 1 level 2 certificate mathematics a kma0 3h paper 3h edexcel

cambridge igcse maths past question papers cie vedantu - Sep 07 2022
igcse maths choose from your exam board cie igcse maths core revision notes topic questions past papers cie igcse maths extended revision notes topic questions past
mark scheme results january 2014 pearson qualifications - Oct 08 2022
oct 14 2023 cambridge igcse maths past question papers download free pdf of cambridge igcse maths past question papers on vedantu com for your cambridge
cambridge igcse maths 0580 past question paper 4 june - Oct 28 2021

igcse maths paper 3h jan 2014 free pdf wiki lwn - Apr 02 2022
13 edexcel igcse maths 3h 14 may 2014 14 edexcel igcse maths 4h 20 may 2014 igcse jan 2014 3h solutions mp4 solving complete past maths exam paper 21 may june