HP Color LaserJet CM1312 MFP Series Service Manual

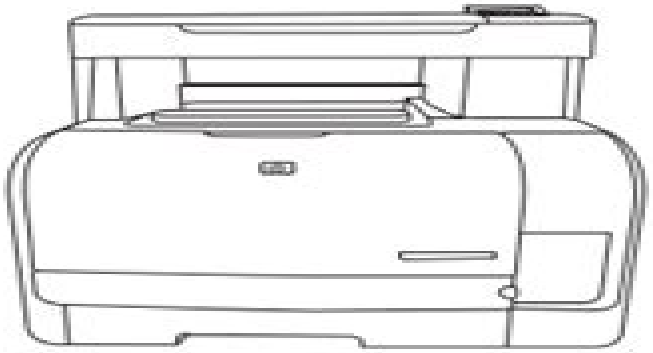

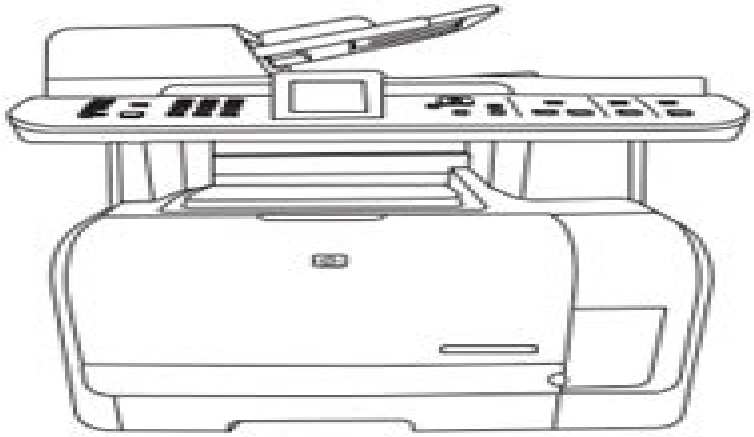

Laserjet Cm1312 Service Manual

VM Jensen

Laserjet Cm1312 Service Manual:

Service Manual Diamond T Motor Car Company. Service Dept,1948 Service Repair Manual David Brown Tractors Ltd,1979 VE Series Valiant Service Manual Chrysler Australia. Service Division,1967 Technical Service Manual ,

Service Manual Chrysler Corporation,1989 Service Manual Zenith Radio Corporation,1947* *Service Manual* Chrysler Canada ltd,1964 **Radio Service Manual** Atwater Kent Manufacturing Company,1926 VE" Series Valiant Service Manual Supplement Chrysler Australia. Service Division, **Service Manual** Caterpillar Tractor Company (U.S.A),1983 *John Deere 4030 Tractor Technical Service Repair Manual* ,1978-01-15 **Series 53 Service Manual** Detroit Diesel Corporation,1990 *Tektronix Hard Copy Unit 4631* ,1982 Service manual and installation instructions Apex Electrical Manufacturing Company, Cleveland,1939 **Delco Service Manual** American Bureau of Engineering,1920

MM Dealers Service Manual No. S131 Minneapolis-Moline Company,1951 *Service Manual* ,1968 **Service Manual** Chrysler Corporation,1989 4051 Graphic System Tektronix, Inc,1978 **Fordomatic Service Manual Service Manual** Paul-Marsh Co,1957

When people should go to the books stores, search launch by shop, shelf by shelf, it is essentially problematic. This is why we give the ebook compilations in this website. It will totally ease you to see guide **Laserjet Cm1312 Service Manual** as you such as.

By searching the title, publisher, or authors of guide you in fact want, you can discover them rapidly. In the house, workplace, or perhaps in your method can be all best area within net connections. If you target to download and install the Laserjet Cm1312 Service Manual, it is unconditionally easy then, past currently we extend the associate to buy and make bargains to download and install Laserjet Cm1312 Service Manual suitably simple!

http://www.armchairempire.com/About/publication/HomePages/hay%20una%20cura%20para%20la%20diabetes%20spanish%20edition.pdf

Table of Contents Laserjet Cm1312 Service Manual

1. Understanding the eBook Laserjet Cm1312 Service Manual
    - The Rise of Digital Reading Laserjet Cm1312 Service Manual
    - Advantages of eBooks Over Traditional Books
2. Identifying Laserjet Cm1312 Service Manual
    - Exploring Different Genres
    - Considering Fiction vs. Non-Fiction
    - Determining Your Reading Goals
3. Choosing the Right eBook Platform
    - Popular eBook Platforms
    - Features to Look for in an Laserjet Cm1312 Service Manual
    - User-Friendly Interface
4. Exploring eBook Recommendations from Laserjet Cm1312 Service Manual
    - Personalized Recommendations
    - Laserjet Cm1312 Service Manual User Reviews and Ratings

    - Laserjet Cm1312 Service Manual and Bestseller Lists
5. Accessing Laserjet Cm1312 Service Manual Free and Paid eBooks
    - Laserjet Cm1312 Service Manual Public Domain eBooks
    - Laserjet Cm1312 Service Manual eBook Subscription Services
    - Laserjet Cm1312 Service Manual Budget-Friendly Options
6. Navigating Laserjet Cm1312 Service Manual eBook Formats
    - ePub, PDF, MOBI, and More
    - Laserjet Cm1312 Service Manual Compatibility with Devices
    - Laserjet Cm1312 Service Manual Enhanced eBook Features
7. Enhancing Your Reading Experience
    - Adjustable Fonts and Text Sizes of Laserjet Cm1312 Service Manual
    - Highlighting and Note-Taking Laserjet Cm1312 Service Manual
    - Interactive Elements Laserjet Cm1312 Service Manual
8. Staying Engaged with Laserjet Cm1312 Service Manual
    - Joining Online Reading Communities
    - Participating in Virtual Book Clubs
    - Following Authors and Publishers Laserjet Cm1312 Service Manual
9. Balancing eBooks and Physical Books Laserjet Cm1312 Service Manual
    - Benefits of a Digital Library
    - Creating a Diverse Reading Collection Laserjet Cm1312 Service Manual
10. Overcoming Reading Challenges
    - Dealing with Digital Eye Strain
    - Minimizing Distractions
    - Managing Screen Time
11. Cultivating a Reading Routine Laserjet Cm1312 Service Manual
    - Setting Reading Goals Laserjet Cm1312 Service Manual
    - Carving Out Dedicated Reading Time
12. Sourcing Reliable Information of Laserjet Cm1312 Service Manual
    - Fact-Checking eBook Content of Laserjet Cm1312 Service Manual
    - Distinguishing Credible Sources

13. Promoting Lifelong Learning
    - Utilizing eBooks for Skill Development
    - Exploring Educational eBooks
14. Embracing eBook Trends
    - Integration of Multimedia Elements
    - Interactive and Gamified eBooks

Laserjet Cm1312 Service Manual Introduction

In the digital age, access to information has become easier than ever before. The ability to download Laserjet Cm1312 Service Manual has revolutionized the way we consume written content. Whether you are a student looking for course material, an avid reader searching for your next favorite book, or a professional seeking research papers, the option to download Laserjet Cm1312 Service Manual has opened up a world of possibilities. Downloading Laserjet Cm1312 Service Manual provides numerous advantages over physical copies of books and documents. Firstly, it is incredibly convenient. Gone are the days of carrying around heavy textbooks or bulky folders filled with papers. With the click of a button, you can gain immediate access to valuable resources on any device. This convenience allows for efficient studying, researching, and reading on the go. Moreover, the cost-effective nature of downloading Laserjet Cm1312 Service Manual has democratized knowledge. Traditional books and academic journals can be expensive, making it difficult for individuals with limited financial resources to access information. By offering free PDF downloads, publishers and authors are enabling a wider audience to benefit from their work. This inclusivity promotes equal opportunities for learning and personal growth. There are numerous websites and platforms where individuals can download Laserjet Cm1312 Service Manual. These websites range from academic databases offering research papers and journals to online libraries with an expansive collection of books from various genres. Many authors and publishers also upload their work to specific websites, granting readers access to their content without any charge. These platforms not only provide access to existing literature but also serve as an excellent platform for undiscovered authors to share their work with the world. However, it is essential to be cautious while downloading Laserjet Cm1312 Service Manual. Some websites may offer pirated or illegally obtained copies of copyrighted material. Engaging in such activities not only violates copyright laws but also undermines the efforts of authors, publishers, and researchers. To ensure ethical downloading, it is advisable to utilize reputable websites that prioritize the legal distribution of content. When downloading Laserjet Cm1312 Service Manual, users should also consider the potential security risks associated with online platforms. Malicious actors may exploit vulnerabilities in unprotected websites to distribute malware or steal personal information. To protect themselves, individuals should ensure their devices have reliable

antivirus software installed and validate the legitimacy of the websites they are downloading from. In conclusion, the ability to download Laserjet Cm1312 Service Manual has transformed the way we access information. With the convenience, cost-effectiveness, and accessibility it offers, free PDF downloads have become a popular choice for students, researchers, and book lovers worldwide. However, it is crucial to engage in ethical downloading practices and prioritize personal security when utilizing online platforms. By doing so, individuals can make the most of the vast array of free PDF resources available and embark on a journey of continuous learning and intellectual growth.

FAQs About Laserjet Cm1312 Service Manual Books

1. Where can I buy Laserjet Cm1312 Service Manual books? Bookstores: Physical bookstores like Barnes & Noble, Waterstones, and independent local stores. Online Retailers: Amazon, Book Depository, and various online bookstores offer a wide range of books in physical and digital formats.
2. What are the different book formats available? Hardcover: Sturdy and durable, usually more expensive. Paperback: Cheaper, lighter, and more portable than hardcovers. E-books: Digital books available for e-readers like Kindle or software like Apple Books, Kindle, and Google Play Books.
3. How do I choose a Laserjet Cm1312 Service Manual book to read? Genres: Consider the genre you enjoy (fiction, non-fiction, mystery, sci-fi, etc.). Recommendations: Ask friends, join book clubs, or explore online reviews and recommendations. Author: If you like a particular author, you might enjoy more of their work.
4. How do I take care of Laserjet Cm1312 Service Manual books? Storage: Keep them away from direct sunlight and in a dry environment. Handling: Avoid folding pages, use bookmarks, and handle them with clean hands. Cleaning: Gently dust the covers and pages occasionally.
5. Can I borrow books without buying them? Public Libraries: Local libraries offer a wide range of books for borrowing. Book Swaps: Community book exchanges or online platforms where people exchange books.
6. How can I track my reading progress or manage my book collection? Book Tracking Apps: Goodreads, LibraryThing, and Book Catalogue are popular apps for tracking your reading progress and managing book collections. Spreadsheets: You can create your own spreadsheet to track books read, ratings, and other details.
7. What are Laserjet Cm1312 Service Manual audiobooks, and where can I find them? Audiobooks: Audio recordings of books, perfect for listening while commuting or multitasking. Platforms: Audible, LibriVox, and Google Play Books offer a wide selection of audiobooks.

8. How do I support authors or the book industry? Buy Books: Purchase books from authors or independent bookstores. Reviews: Leave reviews on platforms like Goodreads or Amazon. Promotion: Share your favorite books on social media or recommend them to friends.
9. Are there book clubs or reading communities I can join? Local Clubs: Check for local book clubs in libraries or community centers. Online Communities: Platforms like Goodreads have virtual book clubs and discussion groups.
10. Can I read Laserjet Cm1312 Service Manual books for free? Public Domain Books: Many classic books are available for free as theyre in the public domain. Free E-books: Some websites offer free e-books legally, like Project Gutenberg or Open Library.

Find Laserjet Cm1312 Service Manual :

hay una cura para la diabetes spanish edition
haynes despiece manual clio 2006
~~haynes diesel engine service guide~~
haynes manual morris traveller
haynes manual 2000 honda civic
haynes repair manual gsx600f suzuki
hawker aircraft manual
haynes ford freestar 2005 repair manual
haynes manual ford freestar
hawker aircraft maintenance manual part 5
haynes repair manual honda civic tujk2008 org
haynes repair manual nissan micra
haynes car repair manuals renalt magane classic
haynes manual oldsmobile silhouette 1997 torrent
haynes car repair manuals pajero

Laserjet Cm1312 Service Manual :

Used 2005 Mitsubishi Endeavor LS Sport Utility 4D See pricing for the Used 2005 Mitsubishi Endeavor LS Sport Utility 4D. Get KBB Fair Purchase Price, MSRP, and dealer invoice price for the 2005 Mitsubishi ... 2005 Mitsubishi Endeavor Review &

Ratings Rides like a car, roomy seating, torquey V6 power plant, solid build and materials quality, good crash test scores. Cons. Images 2005 Mitsubishi Endeavor Price, Value, Ratings & Reviews Is the Mitsubishi Endeavor 2005 a good SUV? Owners of the vehicle give it 4.6 out of 5 stars. To find out if the 2005 Endeavor is the right car for you, check ... 2005 Mitsubishi Endeavor Specs, Price, MPG & Reviews The Endeavor's 3.8-liter V-6 generates 225 hp and 255 pounds-feet of torque. The four-speed-automatic transmission incorporates a Sportronic manual-gear-change ... Used 2005 Mitsubishi Endeavor Specs & Features Detailed specs and features for the Used 2005 Mitsubishi Endeavor including dimensions, horsepower, engine, capacity, fuel economy, transmission, ... Used 2005 Mitsubishi Endeavor for Sale Near Me What is the original MSRP of the 2005 Mitsubishi Endeavor? The original MSRP of the 2005 Mitsubishi Endeavor is from $26,294 to $34,094. Limited All-Wheel Drive 2005 Mitsubishi Endeavor Specs Limited All-Wheel Drive 2005 Mitsubishi Endeavor Specs ; Torque, 255 lb-ft. ; Torque rpm, 3,750 ; Payload, 1,020 lbs. ; Maximum towing capacity, 3,500 lbs. 2005 Mitsubishi Endeavor Problems - RepairPal.com Problem with your 2005 Mitsubishi Endeavor? Our list of 6 known complaints reported by owners can help you fix your 2005 Mitsubishi Endeavor. 2005 Mitsubishi Endeavor Consumer Reviews It handles so smooth and can pick up with speed without a slip, spit or sputter! The car is beautiful in the inside, great lighting through out the whole car, ... The Heinemann elementary English grammar Jul 6, 2021 — The Heinemann elementary English grammar. by: Beaumont, Digby ... Cover subtitle: An elementary reference and practice book. Includes index. Notes. The Heinemann ELT English Grammar PDF The Heinemann ELT English grammar.pdf - Free ebook download as PDF File ... Text Digby Beaumont and Colin Granger 1989, 1992. Design and illustration ... The Heinemann ELT English Grammar PDF Join each idea in A with the most suitable idea in B. Make sentences using when and the past continuous or past simple of the verbs in brackets. Example: 1 / ... The Heinemann ELT Elementary English Grammar (with ... The Heinemann ELT Elementary English Grammar (with Key): An Elementary Reference and Practice Book [Digby Beaumont] on Amazon.com. *FREE* shipping on ... Heinemman English grammar Read the publication. The Heinemann ELT English Grammar Digby Beaumont & Colin Granger Progress Tests written by Digby Beaumont & Ken Singleton ... The Heinemann ELT English Grammar - PDF Free Download The Heinemann ELT English Grammar Digby Beaumont & Colin Granger Progress Tests written by Digby Beaumont & Ken Singlet... Author: Beaumont D. | Granger C. The Heinemann Elementary English Grammar with Key Finally, all the rules of English grammar in one comprehensive book, explained in simple terms. The grammar book for the . Shop Grammar Shop all Heinemann teaching book and classroom resources by content area. The Heinemann English Grammar (with Answer Key) The Heinemann English Grammar (with Answer Key) [Beaumont, Digby, Granger, Colin] on Amazon.com. *FREE* shipping on qualifying offers. The Heinemann English ... I have a 2001 Daewoo Lanos. The engine revs is too fast. It Feb 22, 2008 — The first thing to do is to disconnect the idle air control valve. This is located on the side of the throttle body (where the throttle cable ... Daewoo Lanos Idle Rev issue Apr 1, 2010 — The car is a W reg. The problem is that the revs idle at around

1k, she says that when she is driving she can hear the revs going high even ... Daewoo Lanos high Idle speed Hi,. My Daewoo Lanos is having a problem with its idle speed being too high. At a standstill it idles at about 1600rpm, and can be a bit embarassing SOLVED: My daewoo lanos 1999 wont idle at the lights it Feb 23, 2011 — Remove the idle air control motor (IAC) and clean it well and the hole it comes out of with throttle body spray cleaner, or carburetor cleaner ... Daewoo Lanos Stalls: causes and solutions Hello, I have a Lanos and its problem is that it is always powerless and tends to stall. When turning the air conditioning on, this failure is even more ... Rough Idle: Hi Again Everyone, My Lanos ... May 21, 2009 — Hi Again everyone, my lanos idles very rough, doesn't stall, seems to lack power when driving, recently replaced plugs, leads, air filter ... My 2001 Daewoo has a rough idle after. Dec 30, 2012 — It shakes and studders a lot. Sometimes the car stalls and I have to press the gas pedal in order for the car to keep running. After it warms up ... my 2001 daewoo lanos keeps dying when i come to a stop Jun 2, 2014 — I have Daewoo lanos 16v it can't start plugs firering timing is good i sprey qikstart meas start fluid nothing happen it doesn't have camshaft ... Daewoo Matiz Idle Woes - YouTube Daewoo Lanos Idle Air Control Valve Order Daewoo Lanos Idle Air Control Valve online today. Free Same Day Store Pickup. Check out free battery charging and engine diagnostic testing while you ...